FM 4-20.105
TO 13C7-1-51

AIRDROP OF SUPPLIES AND EQUIPMENT:

DUAL ROW AIRDROP SYSTEMS

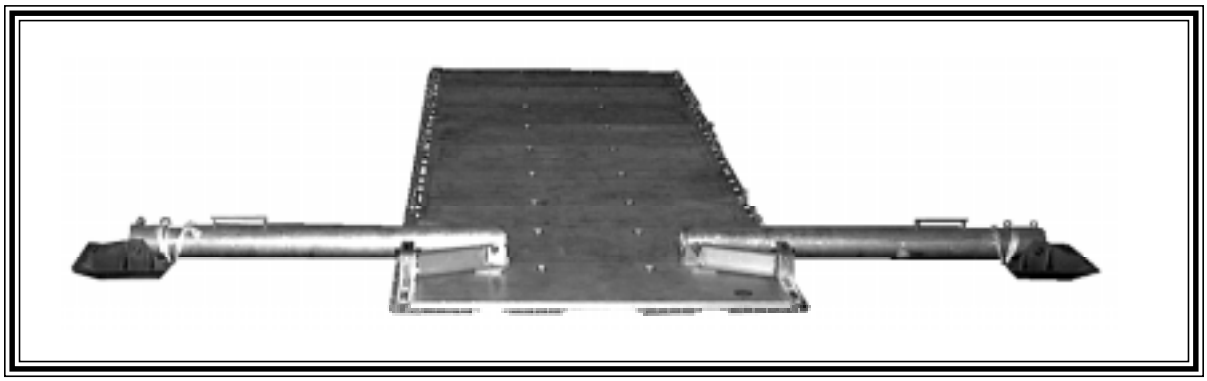

DISTRIBUTION RESTRICTION: Approved for public release; distribution is unlimited.

HEADQUARTERS
DEPARTMENT OF THE ARMY
DEPARTMENT OF THE AIR FORCE

CHANGE NO. 1

HEADQUARTERS
DEPARTMENT OF THE ARMY
DEPARTMENT OF THE AIRFORCE
Washington, DC, 3 September 2003

AIRDROP OF SUPPLIES AND EQUIPMENT: DUAL ROW AIRDROP SYSTEMS

This change adds the procedures for attaching the Deployment Parachutes on the Four Parachute Loads, Rigging M1114 Up-Armored Armament Carrier, M119, 105-Millimeter Howitzer and Accompanying Load for Dual Row Airdrop.

FM 4-20.105/TO 13C7-1-51, 1 April 2002, is changed as follows:

1. New or changed material is identified by a vertical bar (▮) in the margin opposite the changed material.

2. File this transmittal sheet in front of the publication for reference purpose.

3. Remove old page and insert new page as indicated below:

Remove old pages:	**Insert new pages:**
i-vii	**i-viii**
3-27 through 3-30	**3-27 through 3-30.2**
5-1 through 5-2	**5-1 through 5-2**
5-33	**5-33 through 5-68**
6-1 through 6-48	**6-1 through 6-45**
Glossary-1	**Glossary-1**
References-1	**References-1**

DISTRIBUTION RESTRICTION: Approved for public release; distribution is unlimited.

C1, FM 4-20.105
TO 13C7-1-51
3 SEPTEMBER 2003

By Order of the Secretary of the Army and the Air Force:

PETER J. SCHOOMAKER
General, United States Army
Chief of Staff

Official:

JOEL B. HUDSON
Administrative Assistant to the
Secretary of the Army
0323305

LESTER L. LYLES
General, USAF
Commander, AFMC

JOHN P. JUMPER
General, USAF
Chief of Staff

DISTRIBUTION:

Active Army, Army National Guard, and U.S. Army Reserve: To be distributed in accordance with the initial distribution number 115866, requirements for FM 4-20.105.

This publication is available at Army
Knowledge Online (www.us.army.mil)
And the General Dennis J. Reimer
Training and Doctrine Digital Library at
(www.adtdl.army.mil)

Field Manual
No 4-20.105
Technical Order
No 13C7-1-51

Headquarters
Department of the Army
and the Air Force
Washington, DC, 1 April 2002

Airdrop of Supplies and Equipment: Dual Row Airdrop System

Contents

Chapter 7 **Rigging Dual Row Airdrop System (DRAS) M101A1 or M101A2, 3/4-Ton Cargo Trailer With Accompanying Loads**

PREFACE

SCOPE

The purpose of this manual is to provide the latest approved procedures for rigging Dual Row Airdrop System (DRAS) airdrop platforms. This manual is written for use by the parachute rigger.

The procedures contained in this manual are typical and serve as the standard from which all DRAS platform rigging is derived. Due to the uniqueness of some equipment and items, **the procedures in a specific rigging chapter may be different from those in chapters 1 through 3. When procedures are different, those in the specific chapter will be followed. When an item of equipment is specified to be used for which its minimum or maximum capacity is exceeded, a notice of exception will be printed at the beginning of each paragraph in each rigging chapter where the exception is authorized.**

Chapters 1 and 2 contain specific limitations and general information about the rigging of DRAS airdrop platform loads for low-velocity airdrop from the C-17 (Globemaster) aircraft.

Chapter 3 shows and tells how to prepare, attach, and safety tie some of the components and systems used in the specific rigging chapters of the FM 4-20.105/TO 13C7-1-51.

USER INFORMATION

The proponent of this publication is HQ TRADOC. You are encouraged to report any errors or omissions and to suggest ways of making this a better manual.

Army personnel, send your comments on DA Form 2028 directly to:

Director
Aerial Delivery and Field Services Department
USA Quartermaster Center and School
1010 Shop Road
Fort Lee, Virginia 23801-1502

Air Force personnel, route your reports on AFTO Form 22 through your respective command Weapons and Tactics to:

Headquarters
Air Mobility Command (AMC/DOKT)
402 Scott Drive, Unit 3AI
Scott AFB, Illinois 62225-5302

Air Force personnel in Special Operations Command, send your reports on AFTO Form 22. HQ AMC/DOK will consolidate and forward changes to:

Director
Aerial Delivery and Field Services Department
USA Quartermaster Center and School
1010 Shop Road
Fort Lee, Virginia 23801-1502

Also send an information copy of AFTO Form 22 to:

WR-ALC/LKCB
460 Richard Ray Blvd
Robins AFB, Georgia 31098-1640

Chapter 1
Airdrop Information

RESPONSIBILITIES

1-1. US Air Force personnel are responsible for loading rigged Dual Row Airdrop System (DRAS) platform loads into the C-17 (Globemaster) aircraft and installing and operating the airdrop system.

TYPE AND METHOD OF AIRDROP

1-2. As used in this manual, DRAS allows platforms to be loaded side-by-side inside C-17 aircraft. DRAS airdrop is designed to supplement the usual surface methods of delivering supplies and equipment to forces in the field.

a. ***Type of Airdrop.*** Currently the only type of airdrop used to deliver platform loads is low-velocity airdrop. DRAS low-velocity airdrop delivers platform loads from C-17 aircraft. The G-11D cargo parachutes are used to slow the descent of the loads to ensure minimum landing shock. The number of cargo parachutes can vary as shown in Table 1-1. Loads with different quantities of the same type parachute may be airdropped from the same aircraft or element provided the following conditions are met:

(1) Airdrop altitude for the aircraft or element will be determined by the type and number of parachutes on the load requiring the highest airdrop altitude.

(2) Aircraft or elements with lower airdrop altitudes will drop before aircraft or elements with higher airdrop altitudes.

(3) The transported force accepts strike report responsibility for loads other than the first platform to exit the aircraft or element lead for formation airdrops.

Table 1-1. Type and Number of Parachutes for Low-Velocity Airdrop

MINIMUM DROP ALTITUDE (FEET AGL)	PARACHUTES
1,000	G-11D 2 to 4

CAUTION
Drop altitudes reflect MINIMUM drop altitudes.

b. ***Method of Airdrop.*** The gravity method is used for DRAS platform loads delivered by low-velocity airdrop. The aircraft flies at an incline of approximately 4 degrees, the locks holding the platforms are removed, and the loads roll out of the aircraft by gravitational pull.

MAXIMUM RIGGED WEIGHT

1-3. The weight cited in the rigged load data for each specific load is typical for the load as shown. Some amount of overweight is allowed as long as load dimensions and rigging procedures are not changed. The maximum rigged weight for a DRAS platform is 14,500 pounds.

NOTE: When a maximum allowable rigged weight is specified in the rigged load data, this weight is the absolute maximum and will not be exceeded.

ACCOMPANYING LOADS

1-4. Accompanying loads are items of supplies and equipment that may be added to a primary load. Each airdrop chapter states whether an accompanying load is authorized.

CENTER OF BALANCE

1-5. **The center of balance (CB) of a DRAS airdrop platform load is based on the total rigged weight and is given in the rigging chapter for a particular item. The CB must fall between 85 and 99 inches from the front of the platform. The CB of each load must be verified.** Methods for computing the CB are in Appendix A.

ITEMS AND LOADS DROPPED IN COLD CLIMATES

1-6. Some items to be dropped may have been modified for use in cold climates by the installation of extra equipment. Special rigging procedures may be needed when the drop item has been so modified. When loads are to be dropped in cold climates, all excess webbing of suspension slings and tie-down straps must be folded and tied with type I, 1/4-inch cotton webbing.

SAFETY PRECAUTIONS

1-7. Safety precautions MUST be closely followed when airdrop platform loads are rigged. Failure to follow the precautions could result in serious injury to personnel or damage to the drop item or aircraft. The following safety precautions shall be taken by the rigger:

a. Make sure that when lifting heavy items, the lifting device has a rated lifting capacity that exceeds the weight of the item to be lifted.

b. Be sure that items being lifted are secured to the lifting device.

c. Avoid working under equipment suspended above a DRAS airdrop platform unless absolutely necessary.

d. Cover all wet cell batteries in service with plastic or nonflammable material.

e. Check fuel tanks to ensure that they do not exceed the fuel level of the specific rigging chapter. Check fuel tanks of small engines to make sure they are drained. Check fuel cans to make sure they are performance-oriented packaging approved. When stowing fuel cans, use cellulose wadding or other suitable material to prevent metal-to-metal contact.

f. Package, mark, and label hazardous materials according to AFJMAN 24-204/TM 38-250.

CAUTION
Only ammunition listed in FM 10-500-53/MCRP 4-3.8/ TO 13C7-18-41 may be airdropped.

KNOTS

1-8. Some of the knots used for rigging platform loads are shown in Figure 1-1.

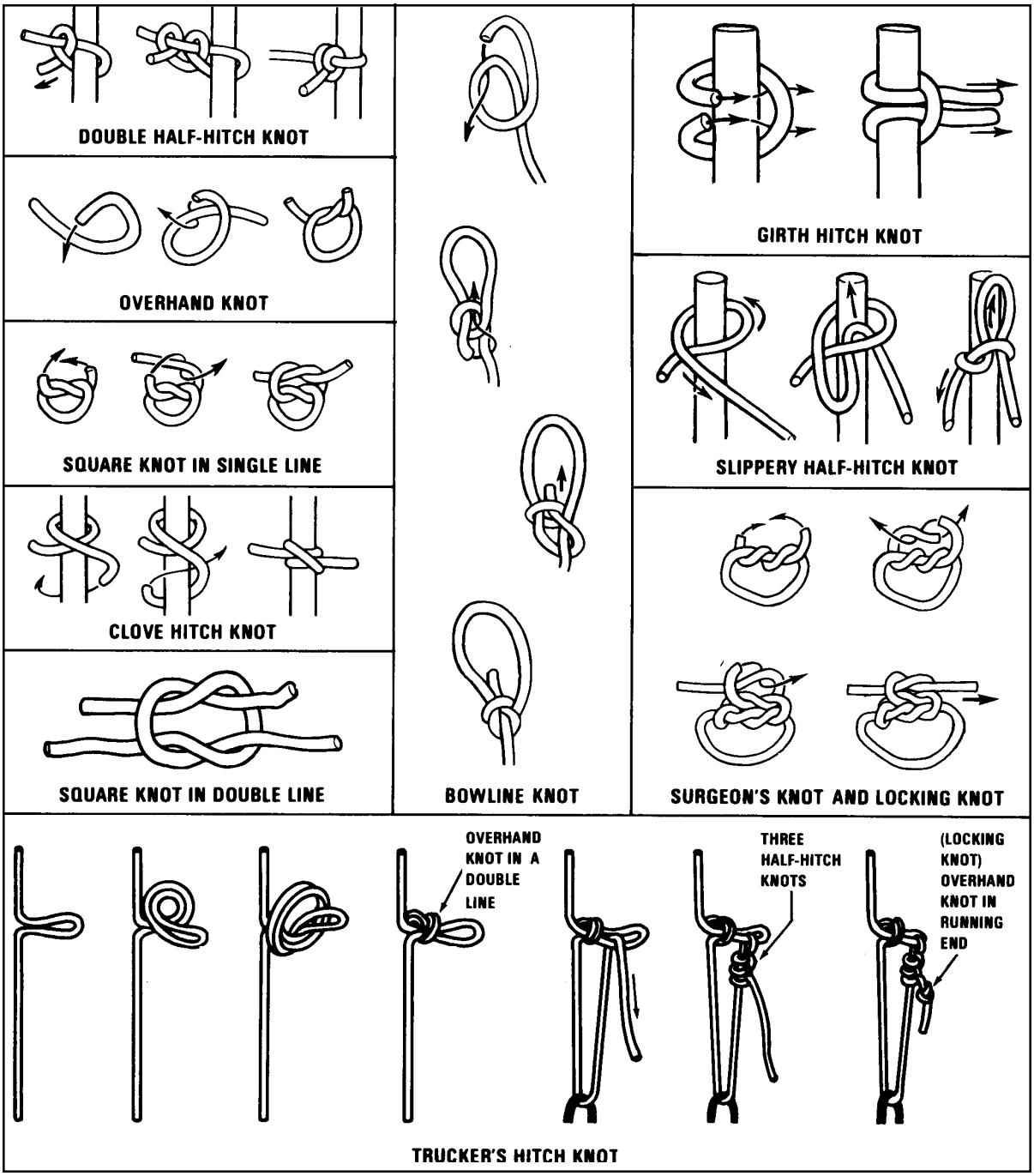

Figure 1-1. Knots Used During Rigging

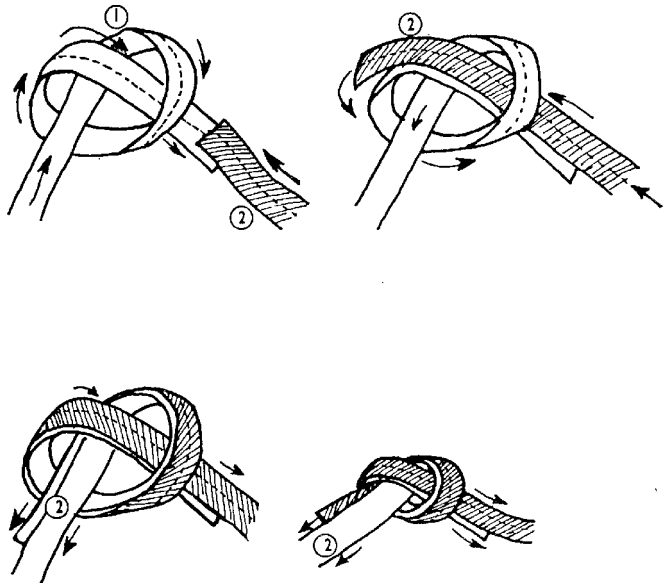

(1) Make an overhand knot in one end.

(2) Follow the curve back in the reverse direction with the other end.

NOTES: 1. There is no need to safety tie the ends when webbing is used.

2. Be sure the knot is neat, so as to tell if it is tied correctly.

3. This knot will jam after heavy loading.

Ring Bend Knot used on the Drive-off Aid

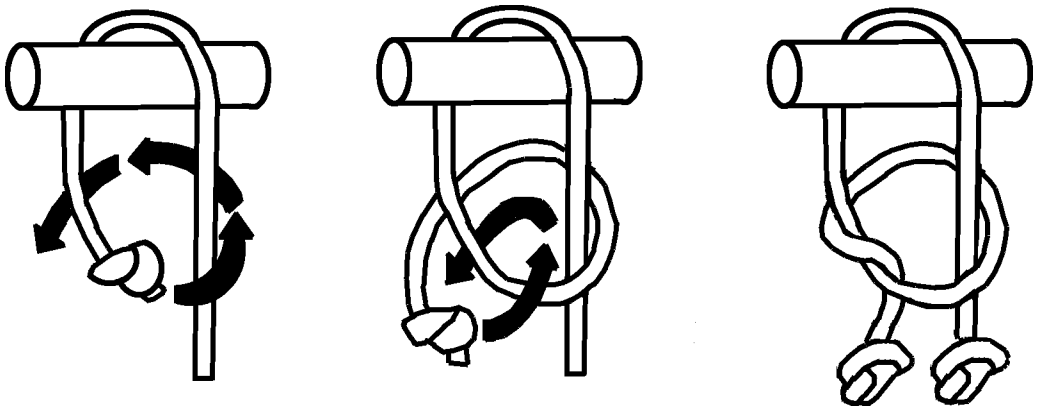

SLIP KNOT

Note: Draw knots tight.

Figure 1-1. Knots Used During Rigging (Continued)

Chapter 2

Rigging Information

SECTION I - DUAL ROW AIRDROP SYSTEM PLATFORM

USE

2-1. The DRAS platform, as shown in Figure 2-1, serves as the base on which supplies and equipment are restrained. This platform also supports the load during the extraction, parachute deployment, suspension, and recovery phases. The DRAS platform is used for low-velocity airdrop. The DRAS platform is 18 feet long. The assembled platform is 88 inches wide. A detailed description of this platform is in TM 10-1670-268-20&P/TO 13C7-52-22.
The DRAS platform spreads the shock of ground impact. The outrigger assembly helps to prevent the platform from rolling over. Limitations for the DRAS platform are listed in Table 2-1.

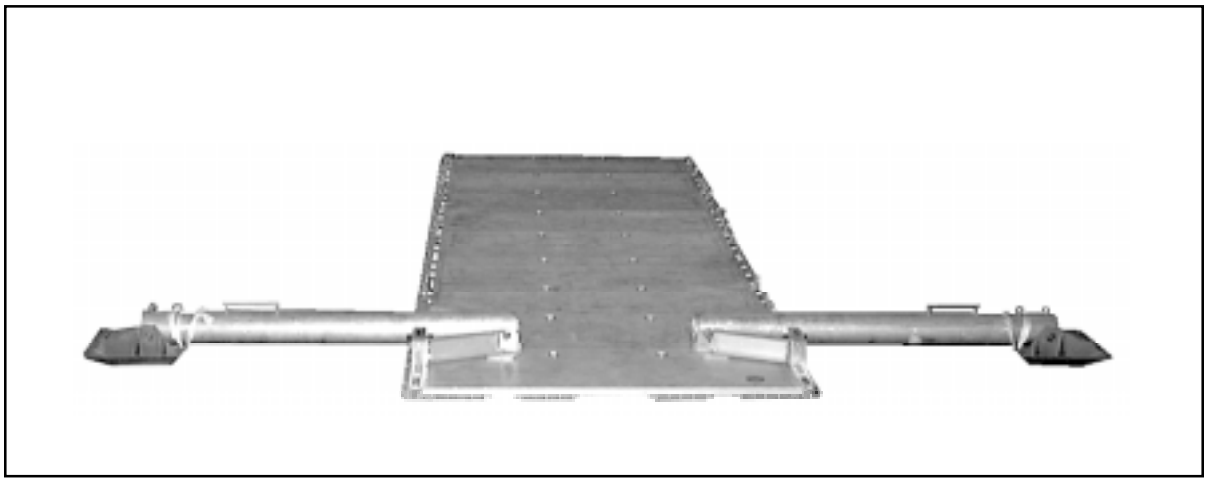

Figure 2-1. Dual Row Airdrop System Platform

Table 2-1. Limitations for DRAS Platform when Dropping from a C-17 Aircraft

Length (Feet)	**Width** (Inches)	**Weight** (Pounds)	**Platform** Surface (Square Feet)	**Minimum** Rigged Weight (Pounds)	**Maximum** Rigged Weight (Pounds)
18	88	1,590 w/o outriggers	132	7,500	14,500
18	88	1,942 w/ outriggers	132	7,500	14,500

PLATFORM LIMITATIONS

2-2. The C-17 (Globemaster) aircraft is specifically designed to deliver supplies and equipment using the DRAS during airborne operations. Platform loads are generally restricted to a height of 118 inches. Platform loads are generally restricted to a weight of 14,500 pounds. For multiple platforms, up to 116,000 pounds of airdrop load may be airdropped. The aircraft has a capability of eight DRAS platforms, six on the floor and two on the ramp.

SECTION II - AIRDROP SUPPLIES AND EQUIPMENT

COMMONLY USED ITEMS

2-3. Items commonly used for rigging DRAS platform loads are described in this section. Each rigging chapter in FM 4-20.105/TO 13C7-1-51 contains one or more tables of equipment required. These tables list the NSN, item, and quantity of each item needed to prepare and rig the load covered in that chapter. Standard DRAS hardware items are shown in Figure 2-2. Standard DRAS straps and canvas items are shown in Figure 2-3. Some textile, wood, and miscellaneous items are described below.

a. Textile Items. The most common textile items and their uses are as follows:

(1) **Type III nylon cord** is used to make safety ties and to hold items in place. It has a tensile strength of 550 pounds.

(2) **1/2-inch tubular nylon webbing** is used to secure items during airdrop. It has a tensile strength of 1,000 pounds.

(3) **5/8-inch or 9/16-inch tubular nylon webbing** may be used for parachute clustering ties in place of 1/2-inch tubular nylon webbing. Five eighths inch tubular nylon webbing has a tensile strength of 2,250 pounds and 9/16-inch tubular nylon webbing has a tensile strength of 1,500 pounds.

(4) **3/4-inch tubular nylon webbing** is used to secure items during airdrop. It has a tensile strength of 2,300 pounds.

(5) **Type VIII nylon webbing** is used for parachute restraint and to safety tie the outrigger foot assembly. It has a tensile strength of 3,600 pounds.

(6) **Type I 1/4-inch cotton webbing** is used to make safety ties and to hold items in place. It has a tensile strength of 80 pounds.

b. ***Wood Items.*** Wood items used when DRAS loads are rigged for specific airdrop are made locally. Details for building these wood items are in the rigging chapter.

NOTE: Plywood will be grade AC or AD.

c. ***Miscellaneous Items.*** Miscellaneous items that may be used when a platform load is rigged are discussed below. The proper use of these items will be covered in detail in the specific rigging chapter for the load.

(1) **Adhesive tape (masking tape), 2 inches wide,** is used to secure folds of excess webbing. It is also used to protect honeycomb from being cut by type III nylon cord and to hold padding in place. It can be used for other tasks also.

(2) **Type IV, cloth-backed adhesive tape, 2 inches wide,** is used to protect honeycomb from being cut by type III nylon cord and to hold padding in place. It can be used for other tasks also.

CAUTION
The type IV, cloth-backed adhesive tape, will not be used to secure folds of deployment lines.

(3) **Cellulose wadding and felt sheets** have many uses. They may be used to pad fragile items, to prevent sharp edges from cutting, and to protect slings during airdrop.

(4) **Energy-dissipating pads (honeycomb)** are used to absorb the landing shock. Honeycomb is also used to level, pad, and fill empty spaces.

INSPECTION OF ITEMS

2-4. Canvas, metal, webbing, and wood items are inspected according to TM 10-1670-296-20&P/TO 13C7-49-2.

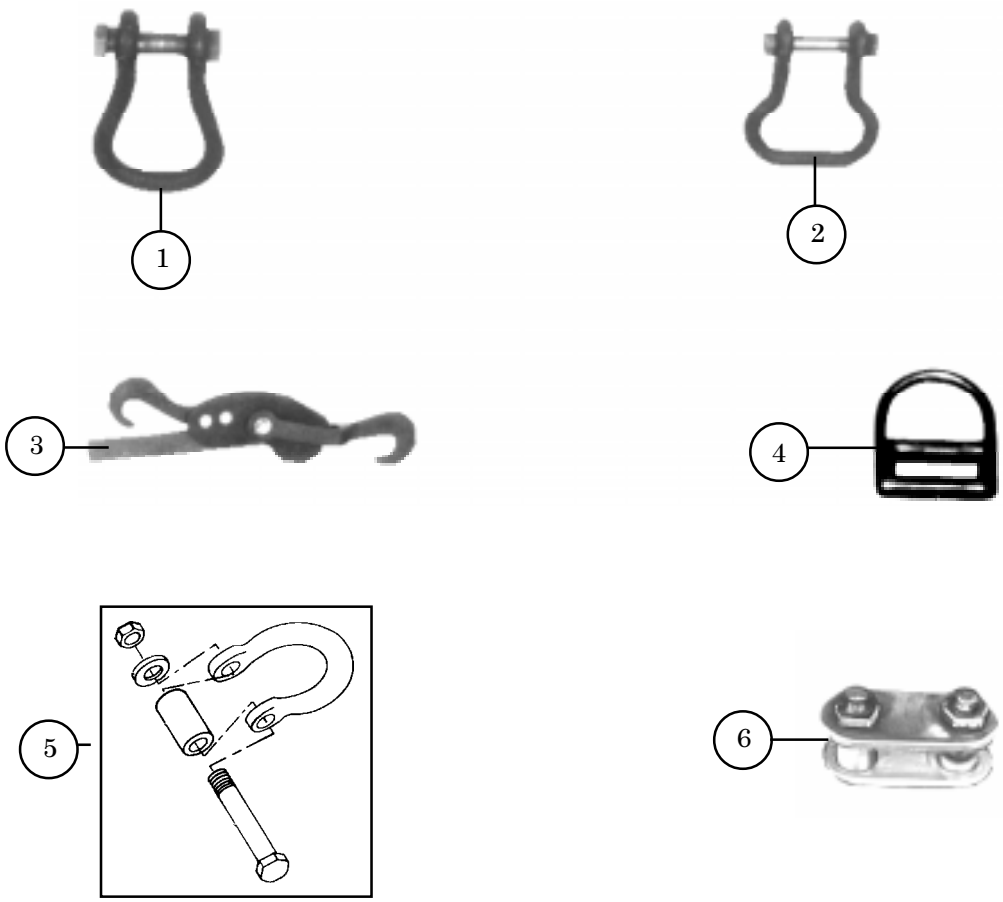

1 The large clevis is used to group bridles and attach riser extensions to the G-11D cargo parachute. The clevis is used in other places, as indicated in the specific rigging chapter.

2 The medium clevis is used as a guide for the suspension slings on the attitude control system. Other uses are given in the specific rigging chapter.

3 The 10,000-pound load binder is used to hook two D-rings together or to hook a D-ring to a platform tiedown clevis on the airdrop platform.

4 The heavy-duty D-ring is used with a 15-foot tiedown strap.

5 The platform clevis is attached to the side rails of the DRAS platform in order to secure the load.

6 The 3 3/4-inch, two-point link assembly is used to join suspension slings and to attach the deployment line to the deployment parachute adapter web.

Figure 2-2. Hardware Items Used for Rigging DRAS Loads

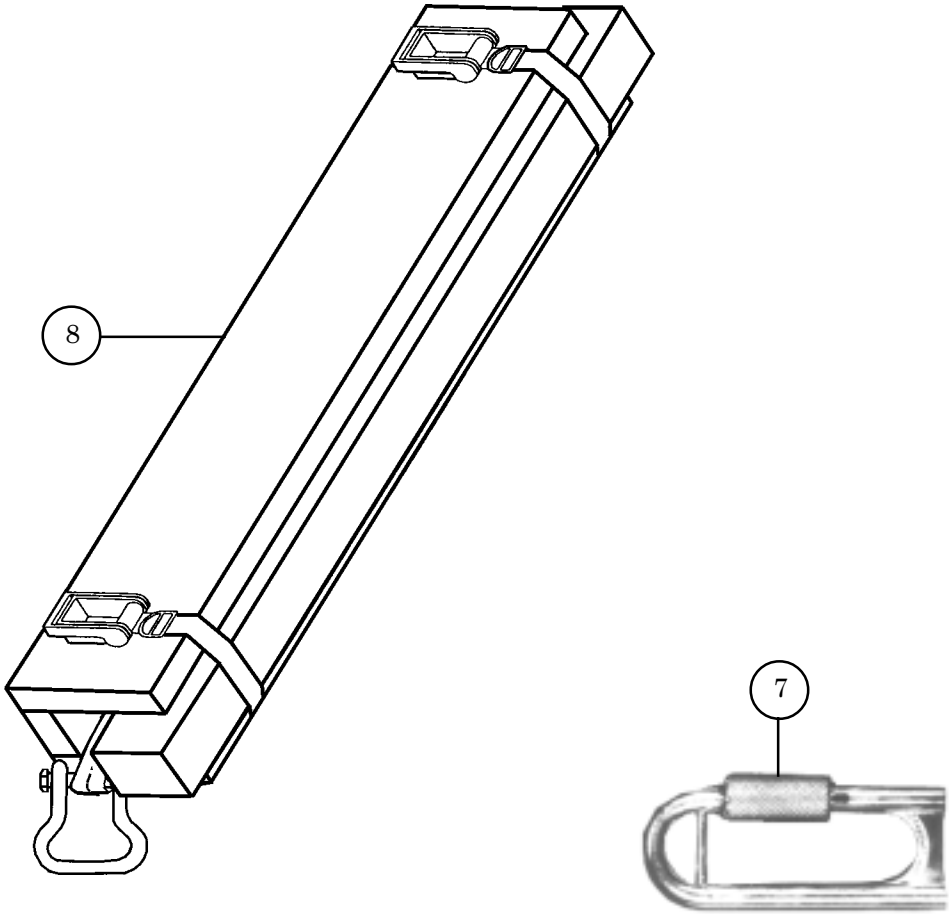

7 The guillotine-type knife is used on parachute release straps to cut the parachute restraint straps. The guillotine knife is also used to cut the outrigger vertical restraint ties.

8 The Attitude Control System (ACS) is a locally fabricated item used as a spreader bar on all loads. The ACS also helps to control the attitude of the platform during extraction of the load. Each load requires two ACSs. The fabrication procedures are shown in Figure 3-32.

Figure 2-2. Hardware Items Used for Rigging DRAS Loads (continued)

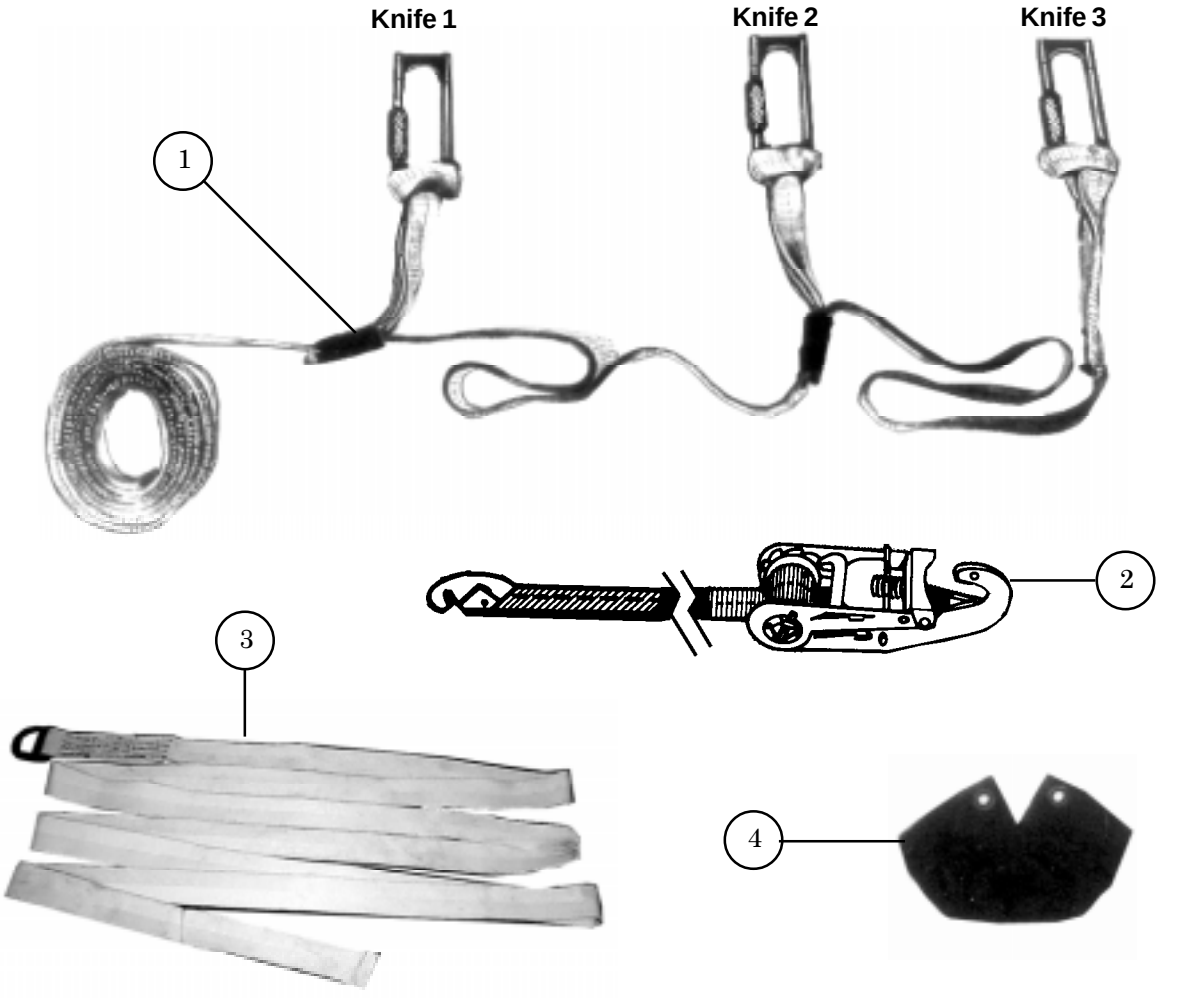

1 The multicut parachute release strap is used to cut one to four parachute restraint straps on a DRAS load. The strap comes with three guillotine-type release knives. Knives that are not being used are removed. This release strap is always used in pairs.

2 The CGU-1/B aircraft cargo tiedown is used to safety the outriggers in the vertical position and on the ACS. **The strap is removed from the outriggers prior to airdrop.**

3 The 15-foot dacron tiedown strap is used to lash a DRAS load to the platform. Other uses of this strap are covered in the specific rigging chapter.

4 The large clevis cover is used on the large clevis when the clevis is used to join the risers of a cargo parachute to a riser extension.

Figure 2-3. Straps and Canvas Items Used for Rigging DRAS Loads

SECTION III - SUSPENSION SLINGS

CARGO SLINGS

2-5. Cargo slings (Figure 2-4) are used as suspension slings on DRAS loads. These slings suspend the load under the cargo parachutes during descent. Suspension slings connect the cargo parachute to the load using a parachute release assembly. Cargo slings may also be used as deployment lines and to extend the risers of cargo parachutes. Cargo slings are also used in the fabrication of the ACS.

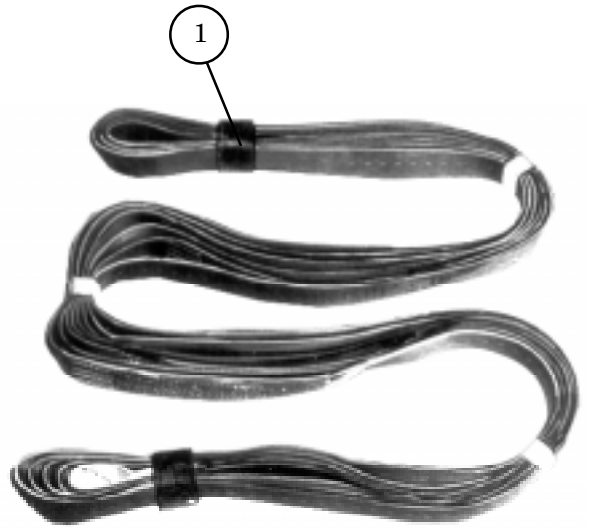

(1) Each sling is made with continuous loops. The loops are 1 3/4-inch-wide, type XXVI nylon webbing. They are held together with keepers of 1-inch, nylon reinforced tape. Each sling has a sliding webbing keeper and a cotton or nylon buffer at each end.

NOTES: 1. The keeper at each end of the sling must be drawn snugly against the object on which the sling is fitted.
2. Suspension slings on DRAS loads will have the nylon buffers removed to fit on the lower suspension links of the M-1 parachute release assembly.

Figure 2-4. Cargo Slings

REQUIREMENTS

2-6. Loads rigged for use on the DRAS **require** 4-loop, type XXVI nylon suspension slings. The type and length of cargo slings authorized for use on a DRAS load are listed in Table 2-2.

Table 2-2. Cargo Slings for DRAS Airdrop

National Stock Number	Length (feet)	Number of Loops	Type of Nylon Webbing
1670-01-062-6306	3	4	XXVI
1670-01-062-6310	11	4	XXVI
1670-01-063-7761	16	2	XXVI
1670-01-062-6302	20	2	XXVI
1670-01-062-6313	60	3	XXVI

SECTION IV - LASHINGS

USE

2-7. The drop item and the accompanying load are lashed to the platform to prevent damage to the load or to the aircraft during airdrop. The accompanying load is lashed to the platform to withstand the same force as the drop item.

COMPONENTS AND STRENGTHS

2-8. The components of the lashings used on DRAS loads are shown in Figure 2-5. The maximum strengths of the various forms of lashings are given in Figure 2-6.

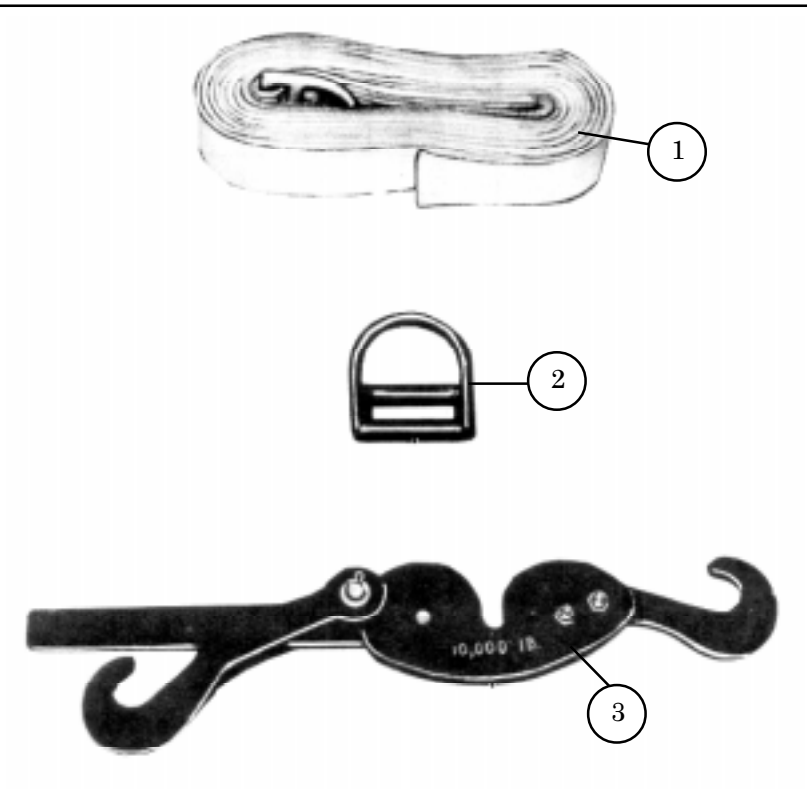

1 15-foot dacron tiedown strap.

2 Heavy-duty D-ring.

3 10,000-pound-capacity load binder.

Figure 2-5. Components of a Tiedown Assembly

Platform **Platform**

1 **Single line configuration.**
A dacron lashing routed in a single line configuration has a maximum strength of 6000 pounds when attached to a DRAS platform side rail and a tiedown clevis. It has a maximum strength of 4,000 pounds when attached to a panel tiedown ring.

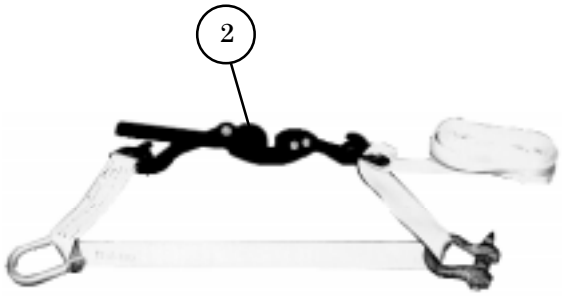

Platform **Item**

2 **Double line (floating binder) configuration.**
A dacron lashing routed in a double line configuration has a maximum strength of 10,000 pounds when attached to a DRAS platform side rail and a tiedown clevis. It has a maximum strength of 4,000 pounds when attached to a panel tiedown ring.

Figure 2-6. Strengths of Dacron Lashings

SECTION V - CARGO PARACHUTES

USE

2-9. Cargo parachutes, also called recovery parachutes, are used to slow the descent of a DRAS platform load. Table 2-3 lists the weight limitations for cargo parachutes used with DRAS platform loads.

Table 2-3. General Weight Limitations for Cargo Parachutes
***Suspended Weight in Pounds**

Parachutes	Minimum	Maximum
G-11D		
2	6,950	8,499
3	8,500	12,799
4	12,750	13,400

***Suspended weight in pounds is the total rigged weight less the weight of the cargo parachutes.**

TYPES

2-10. The G-11D cargo parachute is used when loads are rigged for DRAS. The parachute has a 100-foot-diameter canopy. It has 120 suspension lines (35-foot, type III nylon cord). The parachute has four 2-second cutters and four 12-foot reusable reefing lines. When packed, the assembly weighs 250 pounds.

RISER EXTENSIONS

2-11. Cargo parachutes are used in a cluster. When parachutes are used in a cluster, the risers of each parachute are lengthened so the canopies remain almost vertical as they descend to increase the effectiveness of each canopy. The length of a riser extension and the number of stows used in stowing the extensions are given in Table 2-4.

Table 2-4. Riser Requirements for G-11D Cargo Parachute Clusters

Number of Parachutes in Cluster	Length of Riser Extension (feet)	Number of Extension Stows	Type XXVI Nylon Webbing Slings
2	20	2	20-foot (2-loop)
3 or 4	60	8	60-foot (3-loop)

NOTES:

1. All riser extensions must be continuous type XXVI nylon slings and have identical riser extensions and each must be of the same length.

2. For proper stowing procedures for G-11D, see Chapter 3 .

SECTION VI - PARACHUTE RESTRAINT SYSTEM

USE

2-12. A parachute restraint system, consisting of one or two restraint straps and two multicut parachute release straps, is used on all DRAS platform loads rigged with two or more cargo parachutes.

DESCRIPTION

2-13. When the force is transferred from the deployment parachute to the deployment line, it pulls on the clevis to which the release straps are secured. This pull causes the knives on the release straps to cut the restraint straps and allows the cargo parachutes to deploy. Parachute restraint straps are made from lengths of type VIII nylon webbing as shown in Figure 2-7.

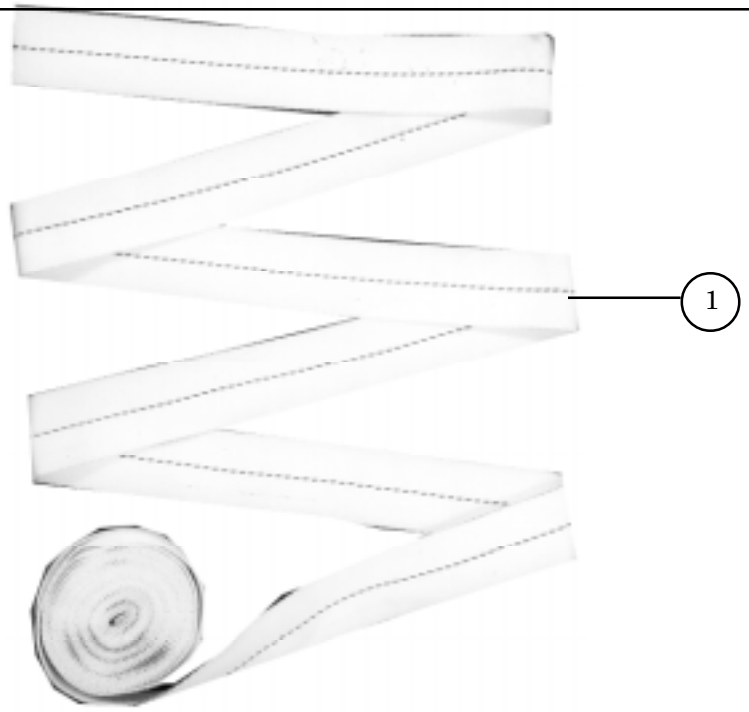

1 Restraint straps made from lengths of type VIII nylon webbing are used to restrain two to four cargo parachutes.

NOTE: The number and type of parachute restraint straps to be used on a particular load may be found in the specific rigging chapter.

Figure 2-7. Webbing Used for Parachute Restraint Straps

SECTION VII - RELEASE ASSEMBLIES

USE

2-14. The cargo parachute release assembly separates the parachutes from the load when the load touches the ground. The separation reduces the chance of the wind dragging or overturning the load.

DESCRIPTION

2-15. The M-1 release is used when a DRAS load is rigged for airdrop. This release is used with DRAS rigged loads weighing up to 13,400 pounds suspended.

INSPECTING AND MAINTAINING

2-16. The M-1 release is inspected and maintained as outlined in TM 10-1670-296-20&P/TO 13C7-49-2. See the TM for specifics on inspection and maintenance.

OPERATION

2-17. The operation of the airdrop cargo parachute release is given below. The release works when the load touches the ground and upper suspension link tilts or moves to the side. When the release tilts, the parachutes are released from the load. Figure 2-8 shows how the release operates.

NOTE: The face plate has been removed to aid in identification.

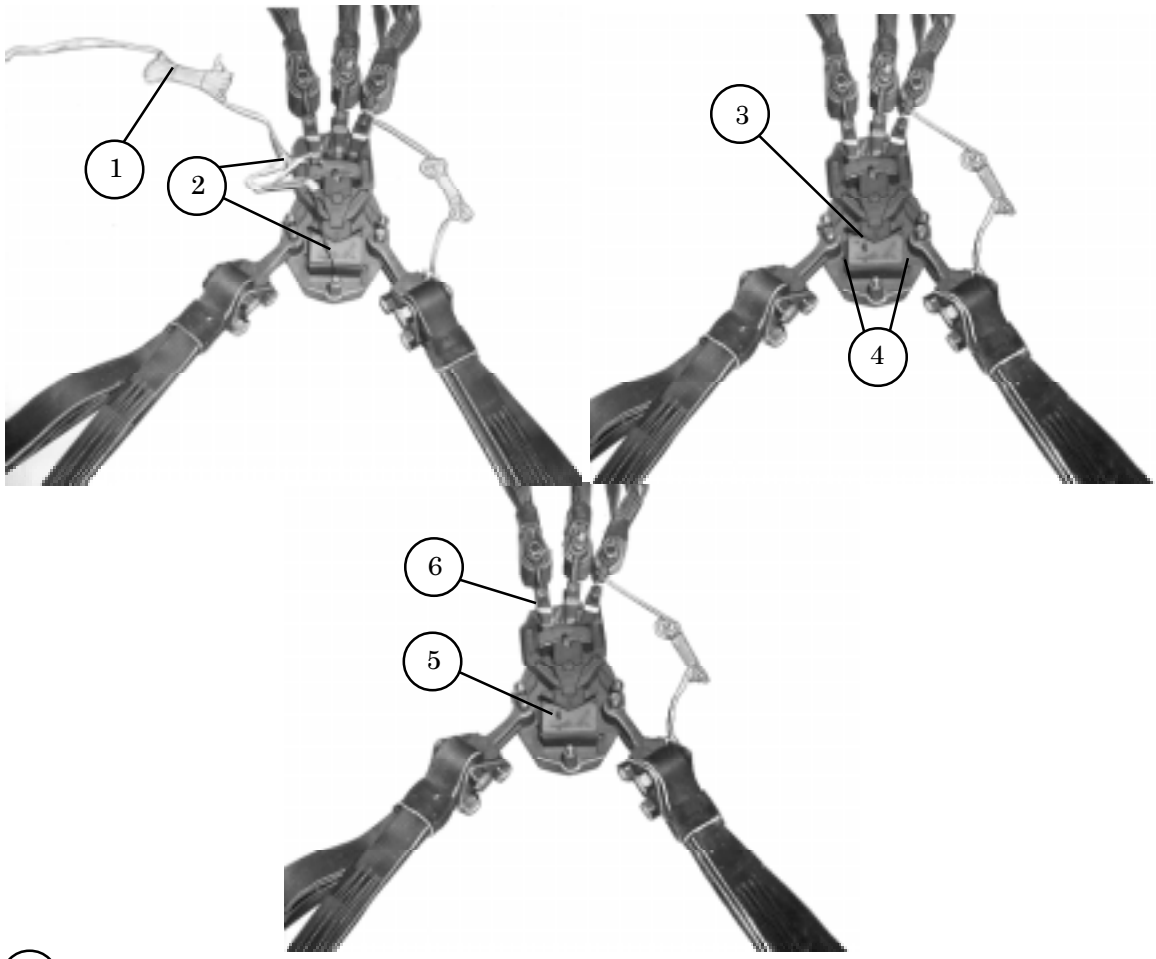

1. As the cargo parachute deploys, the arming wire lanyard is pulled.
2. The safety tie is broken and the arming wire is pulled from the timer.
3. The timer delays from 12 to 16 seconds. This delay allows the load to stabilize itself under the parachute.
4. When the timer winds down, it retracts its keys from the slots in the release.
5. When the keys are retracted from their slots, the timer is free to fall within the release.
6. As the timer falls, it frees the toggle and upper suspension link.

Figure 2-8. Typical Operation of the M-1 Cargo Parachute Release

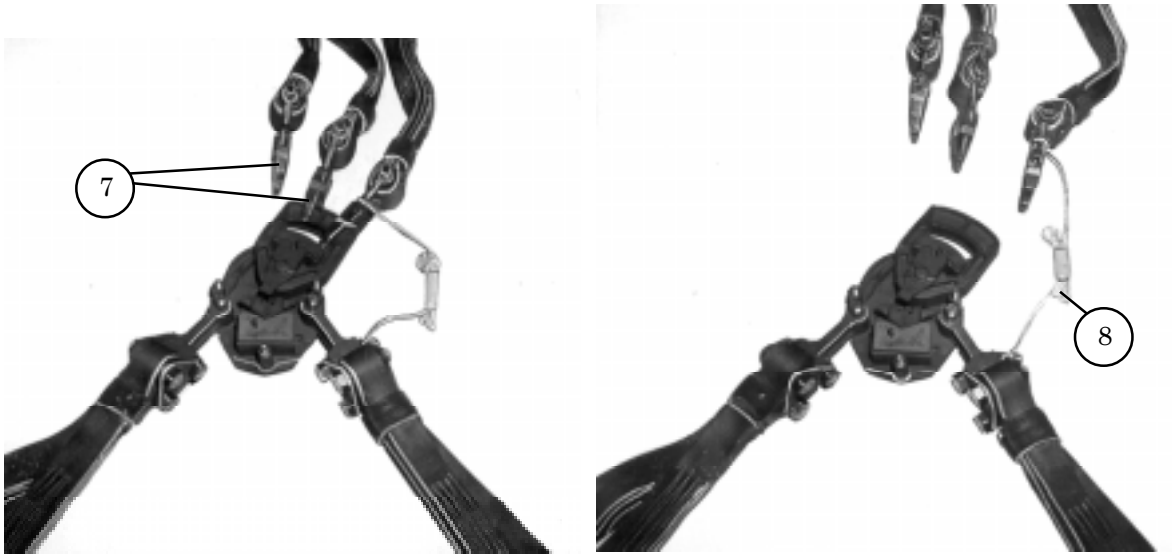

7 When the load descends, the normal upright position of the M-1 release keeps the parachute connectors in place. As the load touches the ground, the upper suspension link tilts and allows the parachute connectors to pull free.

8 The released parachute stretches the dragline until the release drags to one side of the load. Then the dragline breaks.

Figure 2-8. Typical Operation of the M-1 Cargo Parachute Release (Continued)

SECTION VIII - OUTRIGGER ASSEMBLY

USE

2-18. An outrigger assembly is used on every DRAS load to help prevent the load from turning over after landing on the ground. The assembly is attached to the DRAS platform and is deployed from the vertical to the horizontal positon after the load clears the ramp of the aircraft. The component parts of the outrigger assembly are shown in Figure 2-9.

INSPECTING AND MAINTAINING

2-19. Outriggers are inspected and maintained as outlined in TM 10-1670-268-20&P/TO 13C7-52-22. See the specific TM for more information on inspecting and maintaining the outrigger assembly.

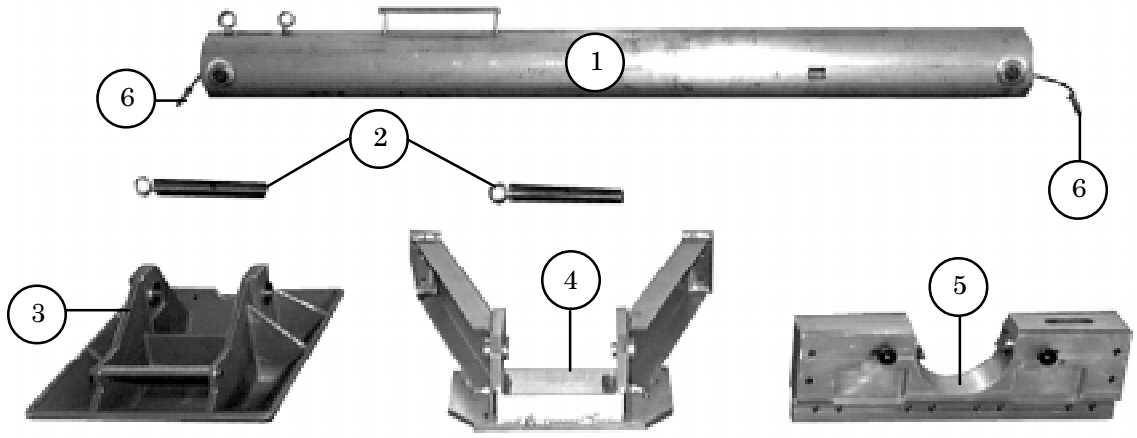

1 Outrigger mast.

2 Mast pivot pin.

3 Outrigger foot.

4 Platform fitting assembly weldment.

5 Platform fitting assembly link.

6 Ball lock pin.

Figure 2-9. Deployable Outrigger Assembly

SECTION IX - DEPLOYMENT PARACHUTE AND DEPLOYMENT LINE

USE

2-20. A deployment parachute is used on every DRAS load to deploy the G-11D cargo parachutes as the load leaves the aircraft. The deployment parachute is a 28-foot extraction parachute packed in a deployment bag and rigged with a release-away static line assembly.

INSPECTING AND MAINTAINING

2-21. Deployment parachutes are inspected, maintained, and packed as outlined in TM 10-1670-277-23&P/TO 13C5-28-2. See the specific TM for more information on inspecting, maintaining, and packing these parachutes. The 28-foot extraction parachute deployment bag modification procedures are located in TM 10-1670-277-23&P. The release-away static line assembly is inspected and maintained as outlined in TM 10-1670-277-23&P/TO 13C5-28-2.

SECTION X - TRANSPORTATION OF RIGGED LOADS

RESPONSIBILITIES

2-22. The using unit is responsible for coordinating transportation of the rigged load from the rigging site to the aircraft. To prevent damage, loads must be lashed to the transporting vehicle and protected during transport. The transporting force must ensure that the off-loading equipment is compatible with the aircraft to be used.

TYPICAL LOADING AND TRANSPORTING EQUIPMENT

2-23. Some of the equipment that may be used to load and transport rigged loads is listed below.

a. Materials-Handling Equipment. If a loading ramp is not available to use in loading the rigged load onto the transporting vehicle, the load is hoisted aboard the vehicle. The materials-handling equipment used to hoist the loads may include but are not limited to the 5-ton wrecker, the 10,000- or 15,000-pound-capacity warehouse crane, or the 10,000- or 15,000-pound-capacity forklift truck.

b. Transporting Vehicle. Any standard military truck or semitrailer with sufficient cargo space and payload capacity can be modified to transport a rigged load from the loading area to the cargo aircraft. However, not all military trucks are compatible with the cargo-loading system of all types of cargo aircraft now in use. Rigged platform loads require straight-in loading over a horizontally positioned ramp from a truck, a forklift, a flatbed, or a cargo loader. Consequently, this may require transfer of the rigged load at the aircraft site before it is off-loaded into the cargo aircraft. The following types of materials-handling equipment can be used to transport and/or off-load platform loads:

(1) The 6- or 10-ton cargo semitrailer can transport loads rigged on airdrop platforms.

(2) The 25,000-pound-capacity cargo loader can move the maximum weight of 25,000 pounds up a 3-percent incline at 15 miles per hour. It can be used for loading all aircraft.

(3) The 40,000-pound-capacity cargo loader can move the maximum weight of 40,000 pounds up a 3-percent incline at 15 miles per hour.

(4) The 60,000-pound-capacity cargo loader (the Tunner) can move the maximum weight of 60,000 pounds up a 3-percent incline at 15 miles per hour.

NOTES: 1. The DRAS platform must be loaded centerline on the 25,000- and 60,000-pound capacity loaders.

2. The 40,000-pound capacity loader requires the right side loads to be against the loader's right side rails and left side loads must be against the loader's left side rails.

Chapter 3

Procedural Information

SECTION I - PLATFORM AND HONEYCOMB PREPARATION

INSPECTING PLATFORM

3-1. The DRAS platform is inspected, or assembled and inspected, as outlined in TM 10-1670-268-20&P/TO 13C7-52-22.

PREPARING THE PLATFORM

3-2. The platform must be prepared by attaching outrigger link assemblies and the outrigger platfrom support weldments according to TM 10-1670-268-20&P/ TO 13C7-52-22 . Install the clevises according to the specific rigging chapter. Figure 3-1 gives an example of how to bolt the clevises to the bushings in the platform side rails and how to number them.

SUSPENDING DRAS PLATFORM LOADS AND SAFETY TIEING SUSPENSION SLINGS

3-3. The DRAS platform is suspended using 3-foot and 11-foot (4-loop), type XXVI nylon slings as shown in Figure 3-2. The clevis positions will be given in the specific chapter for the load being rigged. Safety tie the suspension slings as shown in Figure 3-2.

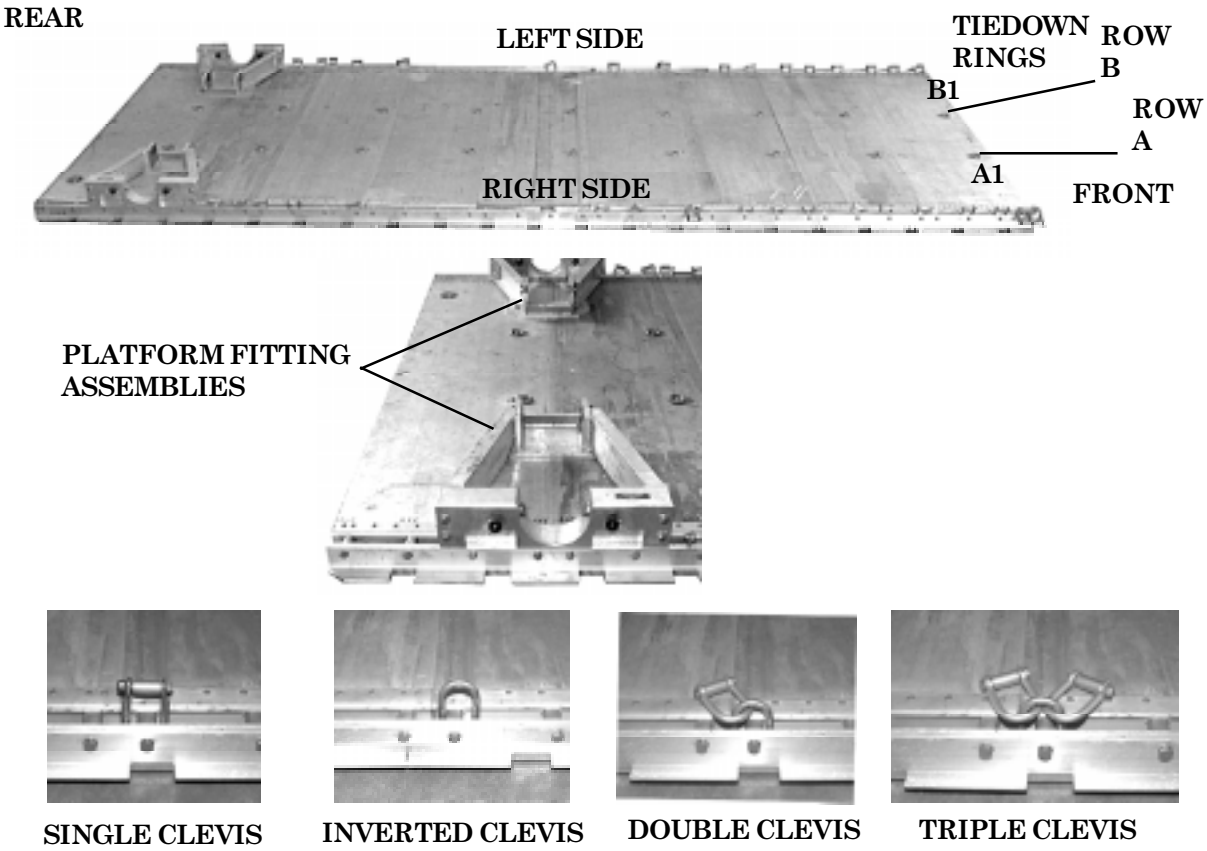

Step:

1. Install the outrigger link assembly and the outrigger platform suppport weldment according to TM 10-1670-268-20&P/ TO 13C7-52-22.

2. Bolt the clevises to the bushings in the platform rails as shown in the specific rigging chapter.

3. Starting at the front of the platform, number the clevises bolted to the right side beginning with 1 and those bolted to the left side beginning with 1A.

4. Starting at the front of the platform, number the two tiedown rings in the panels A and B from right to left. Starting with the first panel, number the tiedown rings beginning with 1 from front to rear.

NOTES:

1. **The single clevis is sometimes installed in an inverted manner if the specific rigging chapter calls for it.**

2. **One clevis is sometimes installed on another inverted clevis. This is called a double clevis.**

3. **Two clevises attached to an inverted clevis is called a triple clevis. The two clevises will be numbered as two separate clevises. Do not number the inverted clevis.**

Figure 3-1. DRAS Platform Prepared

NOTE: This drawing is not drawn to scale.

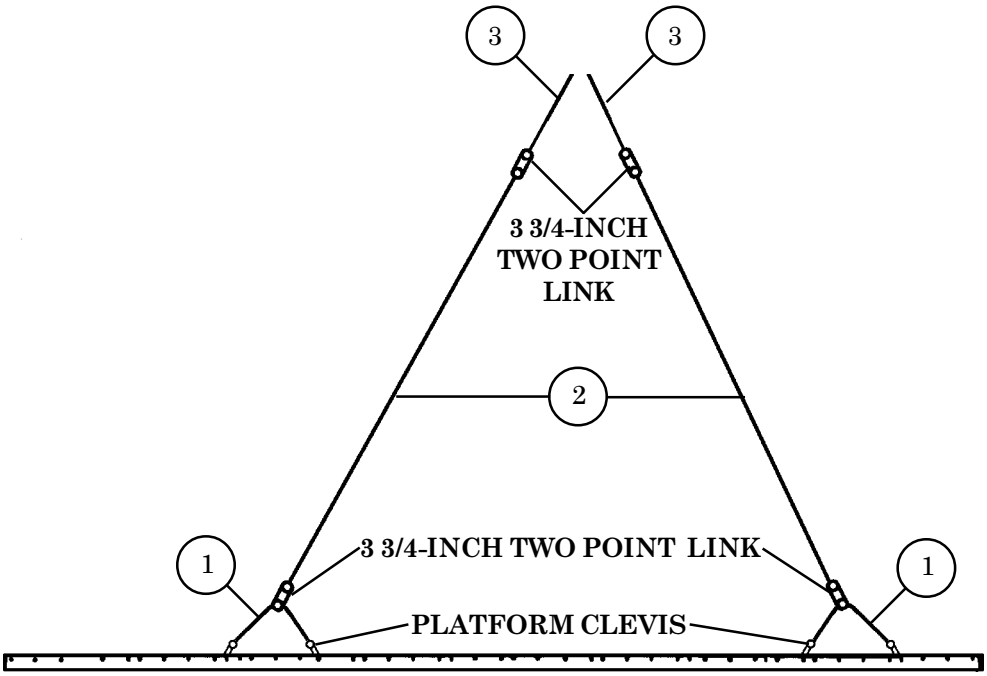

1. Attach a 3-foot (4-loop), type XXVI nylon sling to the platform clevises listed in the specific rigging chapter.
2. Connect an 11-foot (4-loop), type XXVI nylon sling to the center of each 3-foot sling with a 3 3/4-inch two point link.
3. Connect an additional 3-foot (4-loop), type XXVI nylon sling to the end of each 11-foot sling with a 3 3/4-inch two point link.
4. Pad the top 3 3/4-inch two point links with felt and secure the felt with cloth backed tape (not shown).

Figure 3-2. Suspension System and Safety Ties Installed

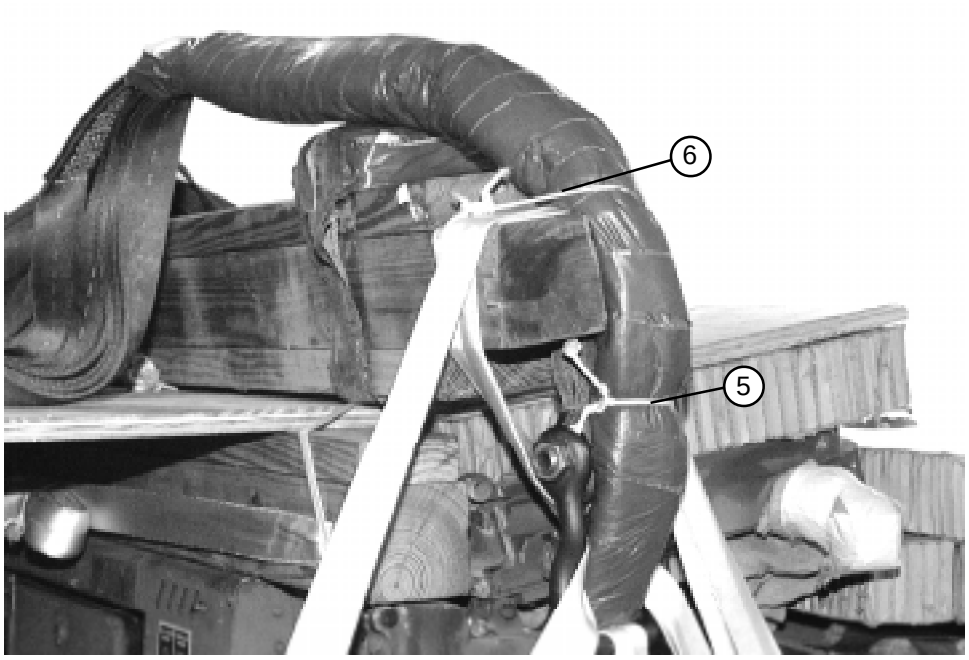

(5) Remove all slack from the slings. Tie a length of type III nylon cord around the 11-foot sling and the ACS sling.

(6) Tie a length of type III nylon cord around the 11-foot nylon sling, behind all lashings, and the 4 by 4-inch lumber of the ACS and tie the ends together.

(7) Repeat steps 5 and 6 on all slings (not shown).

Figure 3-2. Suspension System and Safety Ties Installed (continued)

BUILDING HONEYCOMB STACKS

3-4. Honeycomb stacks must be prepared according to the specific rigging chapter. Honeycomb is used to absorb the landing shock. Figure 3-3 shows a typical honeycomb stack.

NOTE: When honeycomb stacks are longer than 96 inches or wider than 36 inches, alternate the layers to build a solid, cohesive stack.

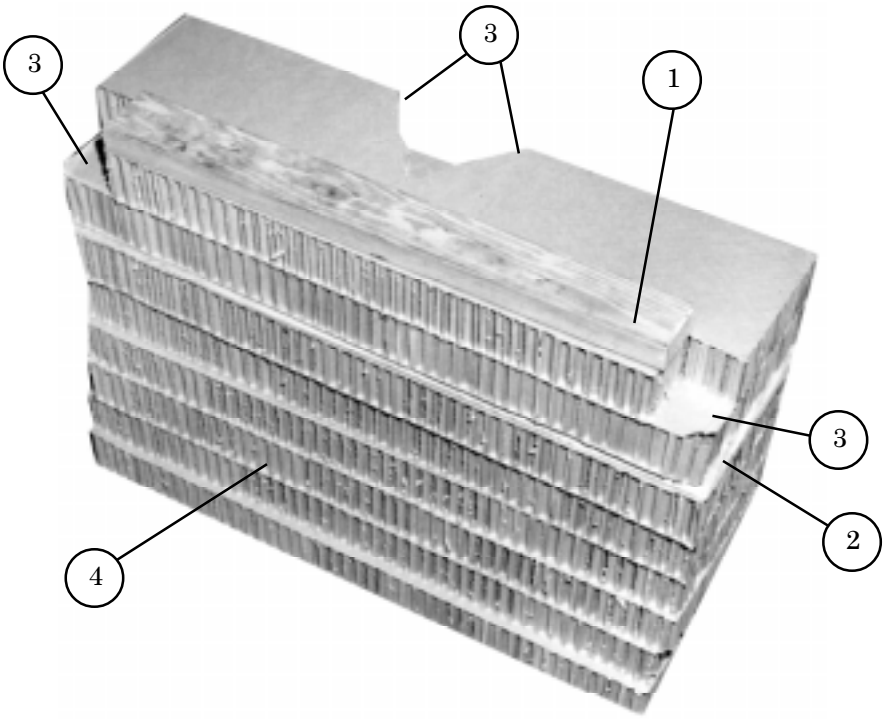

1 Lumber

2 Plywood

3 Cutouts or notches

4 Layers of honeycomb

Note: Glue the layers of the stack together.

Figure 3-3. Typical Honeycomb Stack

PLACING HONEYCOMB STACKS

3-5. Honeycomb stacks must be set on the platform according to instructions in the specific rigging chapter. Figure 3-4 shows a typical placement of honeycomb stacks on a DRAS platform.

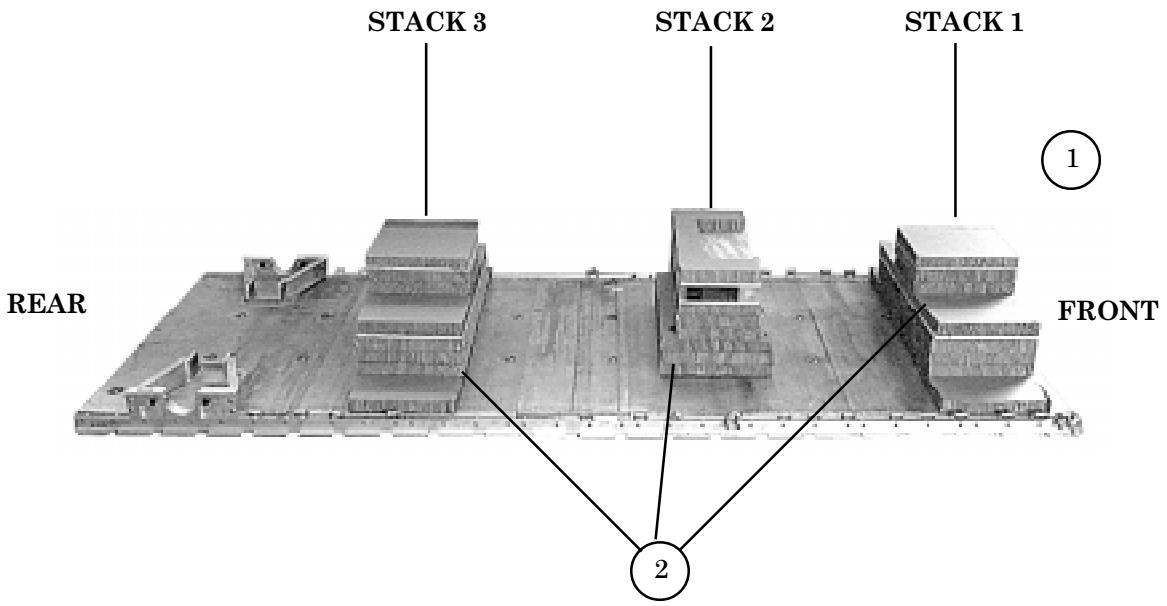

1 Place the honeycomb stacks on the platform according to instructions in the specific rigging chapter.

NOTE: Do not glue the stacks to the platform.

2 Number the stacks from front to rear in a numerical sequence with 1 at the front of the platform.

Figure 3-4. Typical Placement of Honeycomb Stacks on DRAS Platform

DRIVE-OFF AID AIRDROP

3-6. The drive-off aid may be used with the HMMWV truck. The drive-off aid, showing the front platform attachment (Figure 3-5), consists of a fabric track constructed of type X webbing sewn into a ladder-type configuration. The system is placed on two of the identified vehicle's tires and attached to the DRAS platform with type V webbing or 1-inch tubular nylon webbing. There are two tracks to each system. Each track is 30 feet long and 22 inches wide and weighs 21 pounds. When powered up, the vehicle (with tiedown assemblies removed), will progressively wrap the webbed ladder around the two tires (using the platform for leverage) and pull itself clear of the honeycomb and platform.

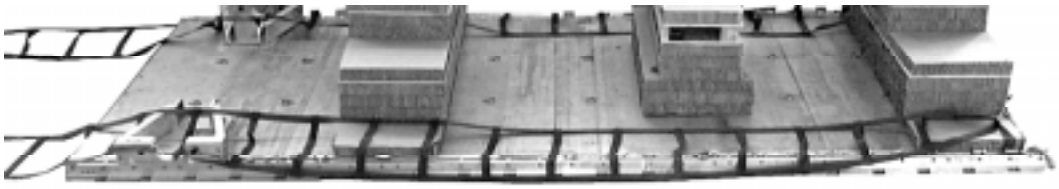

FRONT PLATFORM ATTACHMENT

NOTE: If the vehicle is to be driven off the front of the platform, tie a length of type V nylon webbing or 1-inch tubular nylon webbing from the first bushing through the end loop of the drive-off aid, and through the nearest tie-down ring. When attaching the drive-off aid to the platform using type V or 1-inch tubular webbing, tie the free ends with a ring bend knot as shown in Figure 1-1. Tie the drive-off aid to tie-down rings or platform bushings with type I, 1/4-inch cotton webbing.

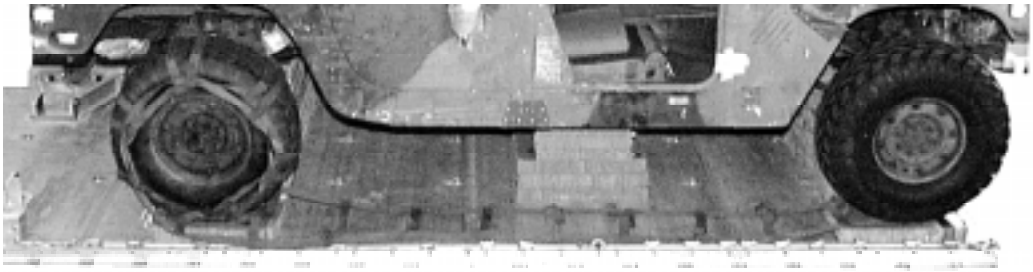

NOTE: Wrap the drive-off aid around the wheel of the vehicle on each side as shown. Tie the end loop of each drive-off aid to the nearest cross piece with a doubled length of type I, 1/4-inch cotton webbing. Wrap the drive-off aid around the wheel until the webbing lays flat on the platform, but is not under tension. Tie the drive-off aid to adjacent tie-down rings or platform bushings on each side with type I, 1/4-inch cotton webbing.

Figure 3-5. Drive-off Aids Installed on Platform

SECTION II - ACCOMPANYING LOAD AND DROP ITEMS

STOWING ACCOMPANYING LOADS

3-7. Each specific rigging chapter contains the weight limitations, placement, and any additional restrictions on accompanying loads.

CAUTIONS

1. Accompanying loads may vary, however, accompanying load locations will not.
2. Only ammunition listed in FM 10-500-53/ MCRP 4-3.8/TO 13C7-18-41 may be rigged for airdrop.
3. Hazardous materials must be packaged, marked, and labeled as required by AFJMAN 24-204/TM 38-250.
4. At least two layers of honeycomb must be placed under all ammunition rigged for airdrop unless the specific rigging chapter states differently.

PREPARING DROP ITEMS

3-8. Some items need to be prepared for rigging. This preparation can include removing, reinforcing, stowing, and securing components. Detailed preparation instructions will be included in the specific rigging chapter.

COVERING LOAD

3-9. Covers may be needed to protect the load and keep the suspension slings from fouling. To keep the load from being damaged by falling hardware such as parachute releases, it may be necessary to cover portions of the load with honeycomb or cloth protectors. If a cover is needed, the specific rigging chapter will include this information and the procedures for its installation.

FITTING D-RINGS

3-10. Fit a D-ring to the end of each tiedown strap as shown in Figure 3-6.

LASHING LOAD

3-11. Lash a DRAS load to the platform according to the instructions in the specific rigging chapter. Install the lashings as shown in Figures 3-7 and 3-8.

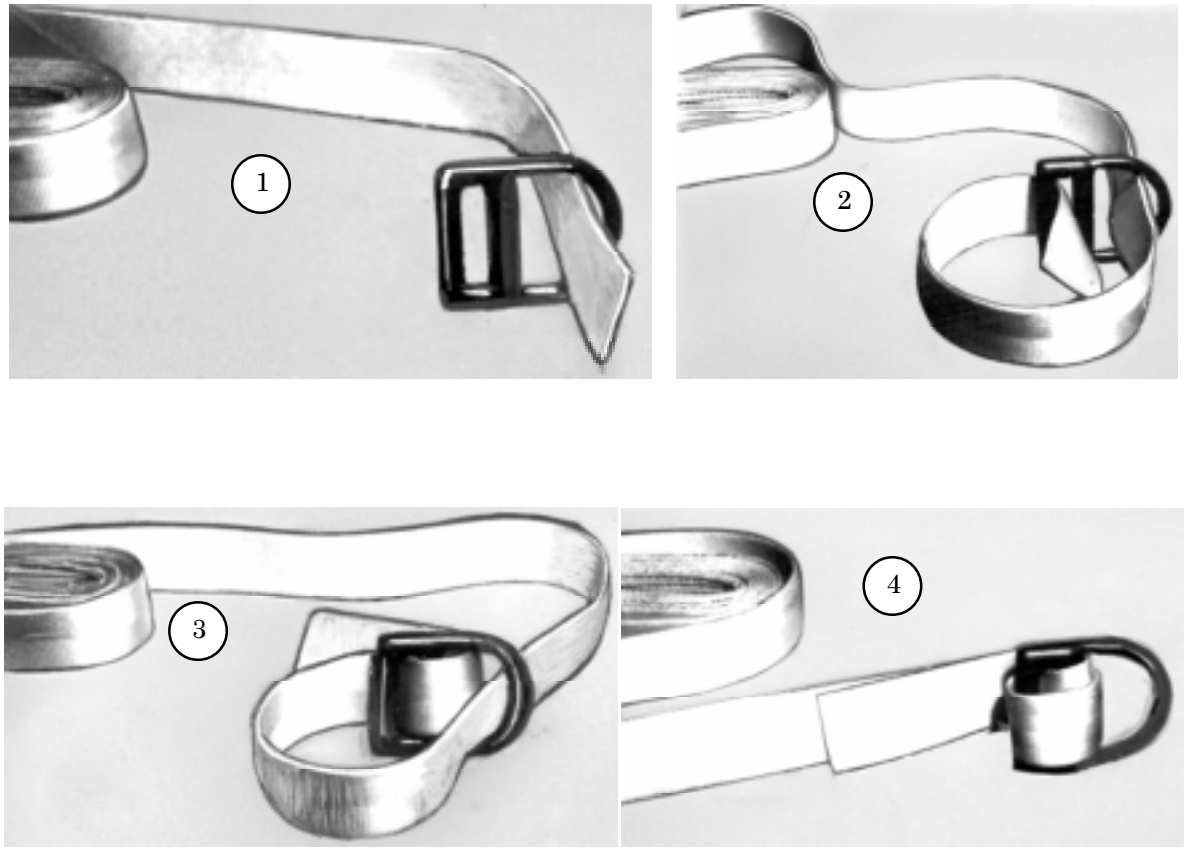

1 Run the free end of the tiedown strap through the large opening in the D-ring.

2 Run the strap around and through the small opening in the D-ring.

3 Run the strap back through the large opening in the D-ring.

4 Pull the strap taut.

Figure 3-6. D-Ring Fitted to Tiedown Strap

CAUTION
Do not tighten the lashings so tight that they cause the platform to bow especially in the aircraft.

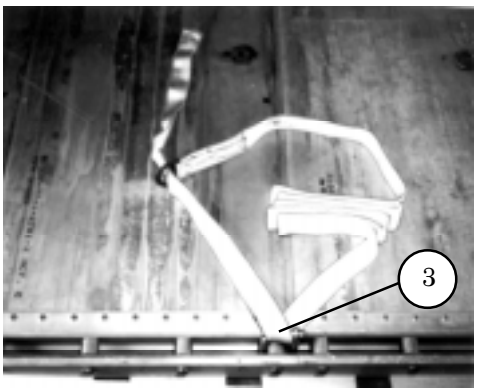

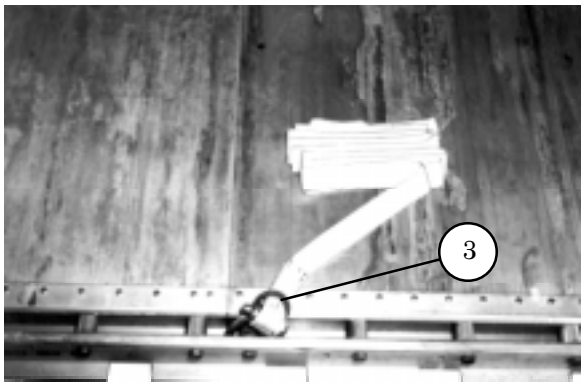

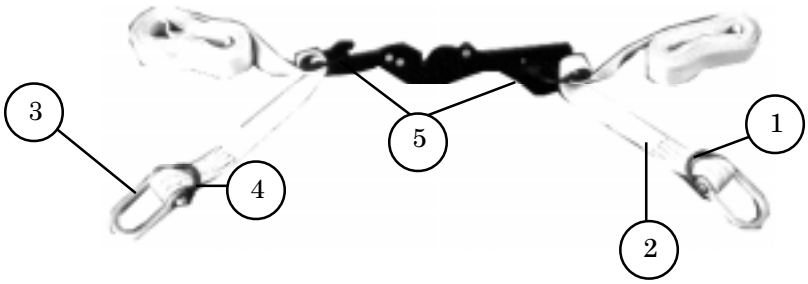

1. Pass the free end of one tiedown strap through a clevis on the right rail and through its own D-ring. Pull the strap taut.
2. Run the free end of the strap up over the load.
3. Pass the free end of a second tiedown strap through a clevis on the left rail and through its own D-ring. Pull the strap taut.
4. Run the free end of the strap up over the load.
5. Fit a D-ring on the free end of each strap as described in Figure 3-6, and place the D-rings on the hooks of a load binder. Safety the binder handle closed as shown in Figure 3-9.

NOTES:

1. **When the tiedown strap length is not a factor, it is permissible to use a single tiedown strap and D-ring with a load binder attached directly to a side rail clevis or tiedown ring.**

2. **Pad all sharp edges that may touch the strap with cellulose wadding or other suitable material.**

Figure 3-7. Single Line Lashing

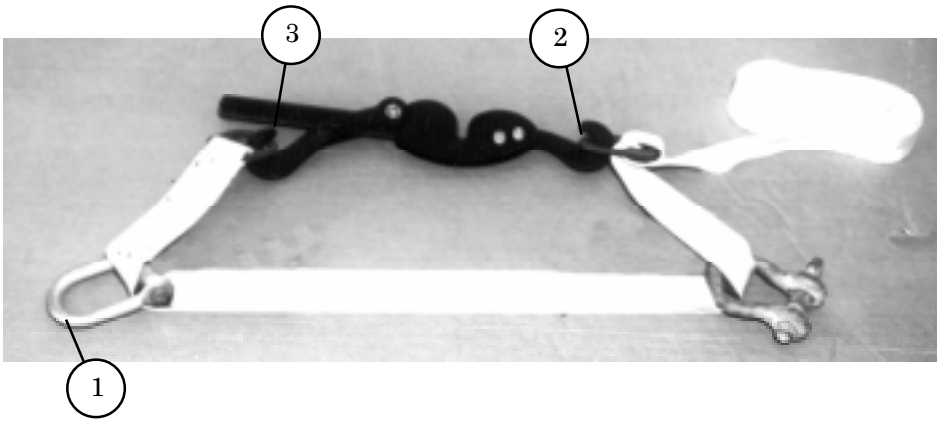

1 Pass the free end of a tiedown strap through a clevis on a rail and up and over, around, or through the indicated tiedown provision on the load. The tiedown provision will be listed in the specific rigging chapter for a particular load. Run the strap back toward the clevis.

2 Fit a D-ring to the free end of the strap (Figure 3-6), and place the D-rings on the hooks of a load binder. Close the handle of the load binder pointing toward the platform.

3 Safety the binder handle closed as shown in Figure 3-9.

Figure 3-8. A Looped (Floating Binder) Lashing

SAFETY TIEING LOAD BINDER HANDLES

3-12. Fold the excess tiedown strap, and place the folds alongside the load binder handle. Safety tie the load binder handle closed as shown in Figure 3-9.

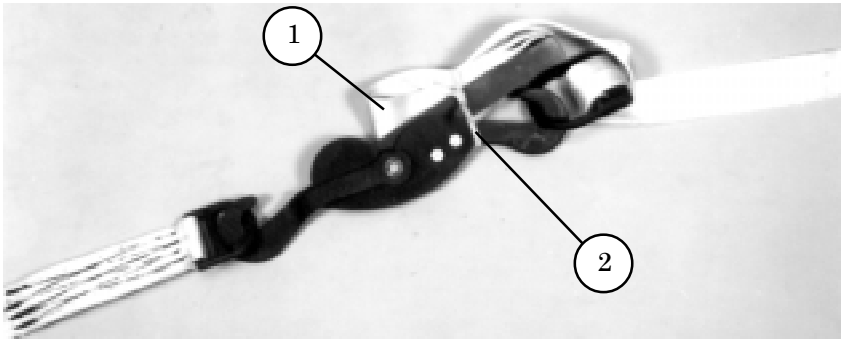

1 After the handle of the load binder has been closed, fold or roll any excess tiedown strap and place the folds alongside the load binder handle.

2 Tie the folded webbing to the binder and the binder handle closed with a single length of type I, 1/4-inch cotton webbing.

Figure 3-9. Load Binder Handle and Excess Webbing Safety Tied

FORMING A 30-FOOT, 45-FOOT, OR GREATER LENGTH TIEDOWN STRAP

3-13. When needed, attach 15-foot tiedown straps together to form a 30-foot, 45-foot, or greater length tiedown strap as shown in Figure 3-10.

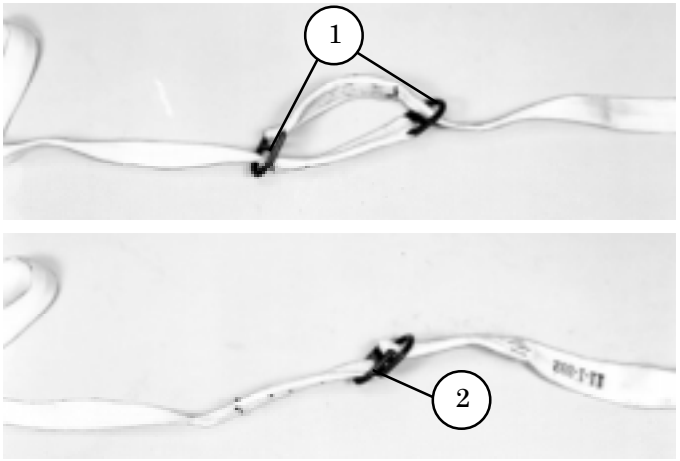

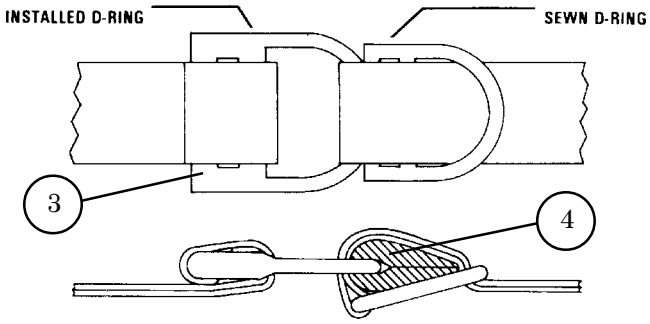

1. Run the free end of two 15-foot tiedown straps through the D-ring of the opposite strap to form a 30-foot strap.
2. Pull the straps taut.
3. Install a D-ring on a free end of the 30-foot strap. Pass the free end of a 15-foot tiedown strap through the installed D-ring and back through its own D-ring to form a 45-foot or greater strap.
4. Insert a 2- by 5-inch piece of 1/2-inch felt around the installed D-ring.

NOTE: Make sure the felt is centered around the installed D-ring.

Figure 3-10. A 30-Foot, 45-Foot, or Greater Length Tiedown Strap Formed

SECTION III - CARGO PARACHUTES

RISER EXTENSIONS

3-14. The risers of a cluster of G-11D cargo parachutes used on DRAS loads must be extended (lengthened). The length of the extension needed for the cluster is given in Table 2-4.

a. Forming Extensions. Only continuous riser extensions may be used.

b. Bolting Extensions to Risers. Bolt the riser extension to the risers of a cargo parachute as shown in Figure 3-11.

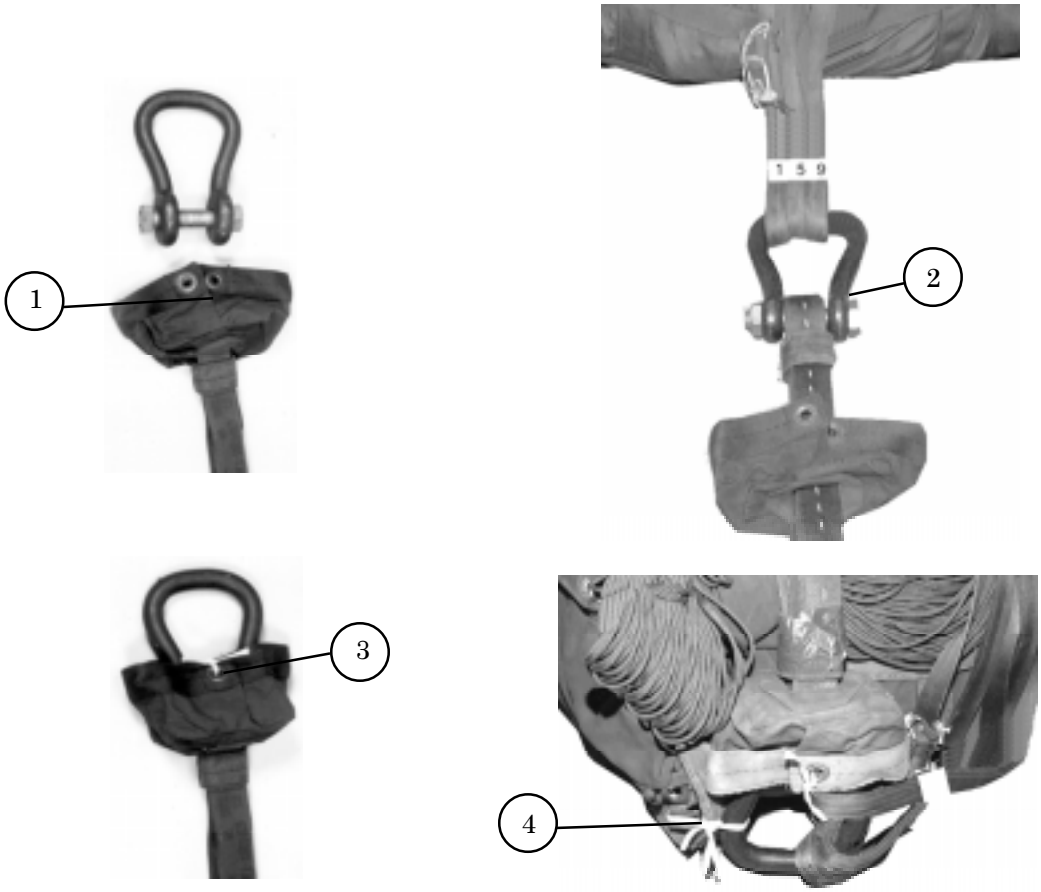

1 Slip a clevis cover on one end of a riser extension.

2 Fit the sling on the bolt of the clevis running through the parachute risers.

CAUTION
The nuts must be tight enough to keep them from loosening during transport and airdrop.

3 Slide the clevis cover up over the bolt of the clevis, and tie the cover in place with a length of type I, 1/4-inch cotton webbing. Pass the tie through the grommets of the cover.

4 Tie the clevis to the left bottom bag carrying handle with one double length of type I, 1/4-inch cotton webbing.

Figure 3-11. Riser Extension Bolted to Risers

STOWING RISER EXTENSIONS

3-15. The riser extensions for the G-11D cargo parachutes must be stowed as shown in Figures 3-12 and 3-13.

NYLON BAG

NOTE: The nylon deployment bags have the riser extension securing line permanently attached.

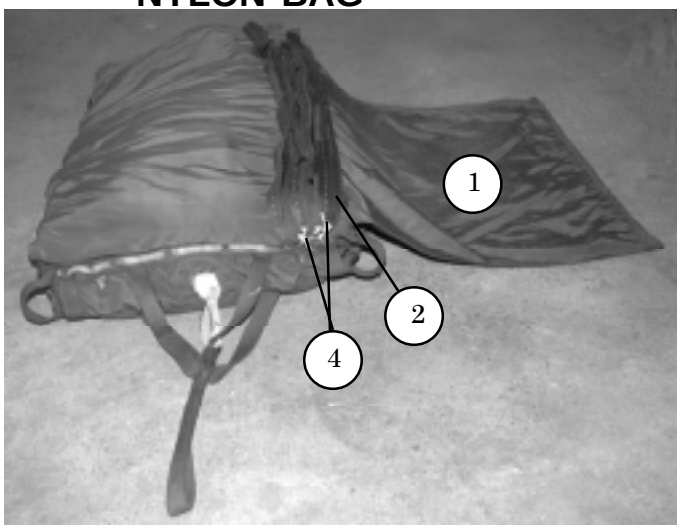

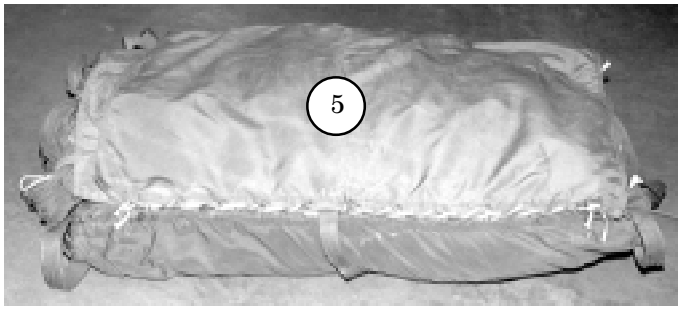

1. Open the riser extension flap which is attached with type I, 1/4-inch cotton webbing.
2. Start at the end of the riser extension fitted to the clevis and S-fold the extension into the riser extension compartment.
3. Leave approximately 3 feet of the free end of the extension outside the riser end of the compartment. (Not shown)
4. Tie each stow to the riser extension securing line with one turn double, type I, 1/4-inch cotton webbing.

CAUTION
Do not girth hitch the type I, 1/4-inch cotton webbing ties to the riser extension securing line.

5. Close the riser flap according to TM 10-1670-280-23&P/TO 13C5-31-2.

Figure 3-12. Riser Extension Securing Line Installed and Riser Extension Stowed

COTTON BAG

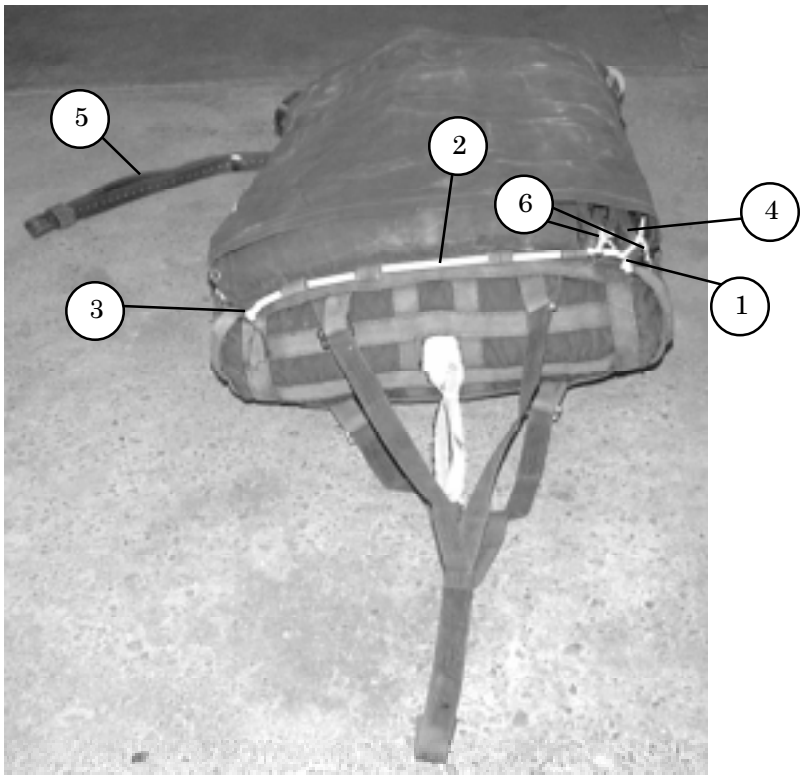

1. Fold an 8-foot length of 1/2-inch tubular nylon webbing in half lengthwise. Run the loop in the folded end through the left carrying handle. Run the free ends of the webbing through this loop, and pull the webbing taut.

2. Run the webbing across the parachute, passing it through the riser extension retaining loops (end tabs).

   NOTE: Do not pull the webbing tight across the parachute.

3. Tie the webbing to the right top carrying handle with three alternating half hitches and an overhand knot in each free running end.

4. Start at the end of the riser extension fitted to the clevis and S-fold the 20-foot extension into the riser extension compartment.

5. Leave about 3 feet of the free end of the extension outside the riser end of the compartment.

6. Tie each stow to the riser extension securing line with ties of one turn double type I, 1/4-inch cotton webbing.

CAUTION
Do not girth hitch the type I, 1/4-inch cotton webbing ties to the riser extension securing line.

Figure 3-12. Riser Extension Securing Line Installed and Riser Extension Stowed (Continued)

NYLON BAG

20-FOOT RISER EXTENSION STOWED

60-FOOT RISER EXTENSION STOWED

60-FOOT RISER EXTENSION STOWED

Figure 3-13. The 20- and 60-Foot Riser Extensions Stowed

STOWING CARGO PARACHUTES

3-16. When referring to cargo parachutes, stowing consists of three steps. First, place the cargo parachutes on the load or on a parachute stowage platform. Second, cluster the parachutes by tying their deployment bags handles together. Third, group the bridles on a large clevis. Stow the parachutes as shown in Figures 3-14 through 3-16.

Note: Nylon and cotton bags may be mixed on the same load.

USING DEPLOYMENT LINES

3-17. The deployment line for DRAS loads is a 3-foot (4-loop), type XXVI nylon webbing sling. One end of the deployment line is fitted on a 3 3/4-inch two point link attached to the adapter web of the deployment parachute. The other end of the line is fitted to the bolt of the large clevis grouping the bridles of a cluster of parachutes.

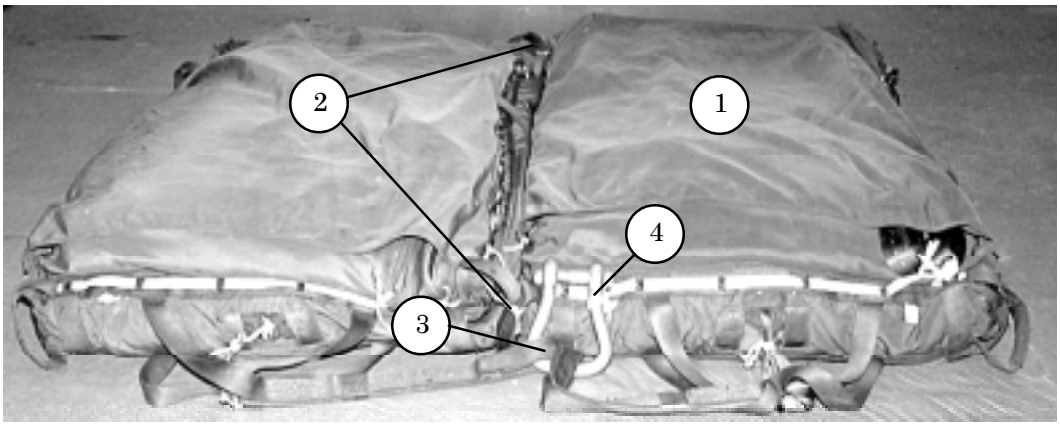

1. Set two parachutes side by side on the load with the riser compartments up and the bridles toward the front of the platform.
2. Tie the inside front and rear cluster attaching loops (hereafter called carrying handles) together with one turn single type III nylon cord.
3. Fit the bridle loops on the arms of a large clevis. Ensure the bolt of the clevis faces up.
4. For the nylon bag, tie the clevis to the right parachute restraint strap loop with a length of doubled type I, 1/4-inch cotton webbing. Secure with a surgeon's knot and a locking knot. For the cotton bag, tie the clevis to the right bridle attaching loop with a length of one turn double type I, 1/4-inch cotton webbing. Secure with a surgeon's knot and a locking knot.

Figure 3-14. Two Parachutes Stowed

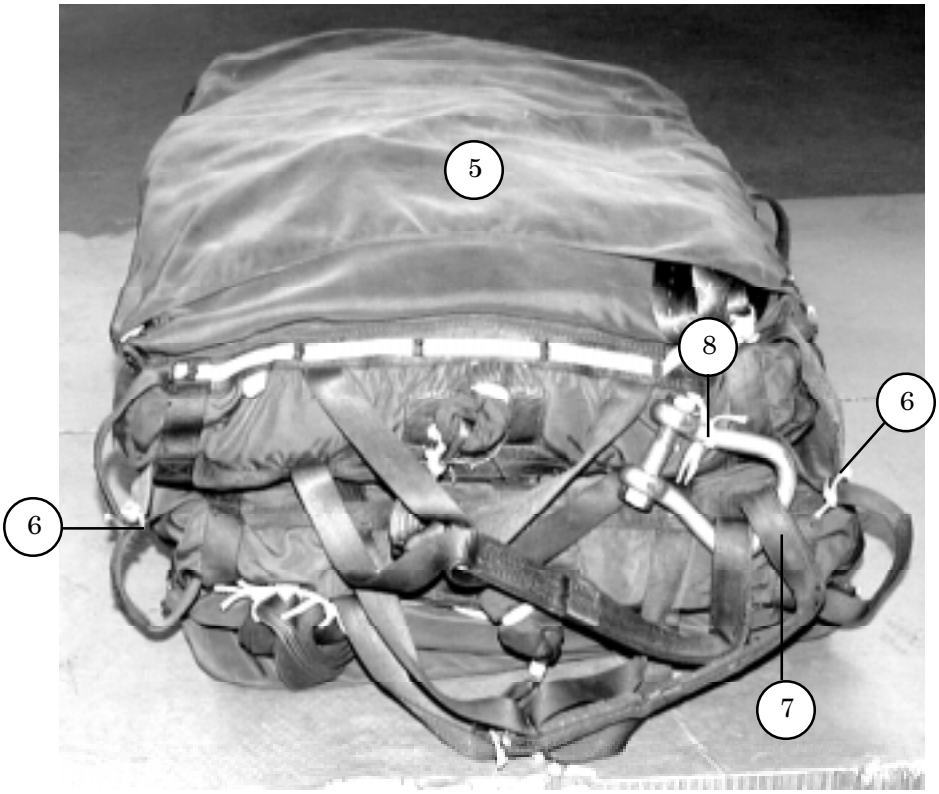

5 Stack two parachutes with the riser compartment of the bottom parachute down and the riser compartment of the top parachute up.

6 Tie the outside front and rear cluster carrying handles together with one turn single type III nylon cord.

7 Fit the bridle loops on the arms of a large clevis. Ensure the bolt of the clevis faces up.

8 For the nylon bag, tie the clevis to the right parachute restraint strap loop with a length of one turn double type I, 1/4-inch cotton webbing. Secure with a surgeon's knot and a locking knot. For the cotton bag, tie the clevis to the right bridle attaching loop with a length of one turn double type I, 1/4-inch cotton webbing. Secure with a surgeon's knot and a locking knot.

Figure 3-14. Two Parachutes Stowed (continued)

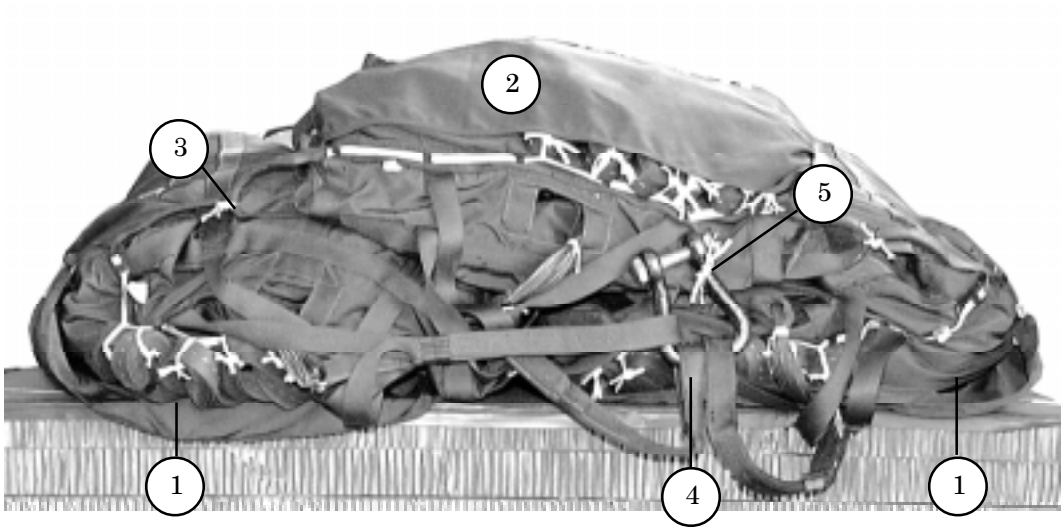

1. Set two parachutes side by side on the load with the riser compartments down and the bridles toward the front of the platform.
2. Center one parachute on top of the two parachutes in step 1 above with the riser compartment up.
3. Tie the front and rear carrying handles together with onr turn single of type III nylon cord.
4. Fit the bridle loops on the arms of a large clevis.
5. For the nylon bag, tie the clevis to the top right parachute restraint strap loop with a length of one turn double type I, 1/4-inch cotton webbing. Secure with a surgeon's knot and a locking knot. For the cotton bag, tie the clevis to the top right bridle attaching loop with a length of one turn double type I, 1/4-inch cotton webbing. Secure with a surgeon's knot and a locking knot.

Figure 3-15. Three Parachutes Stowed

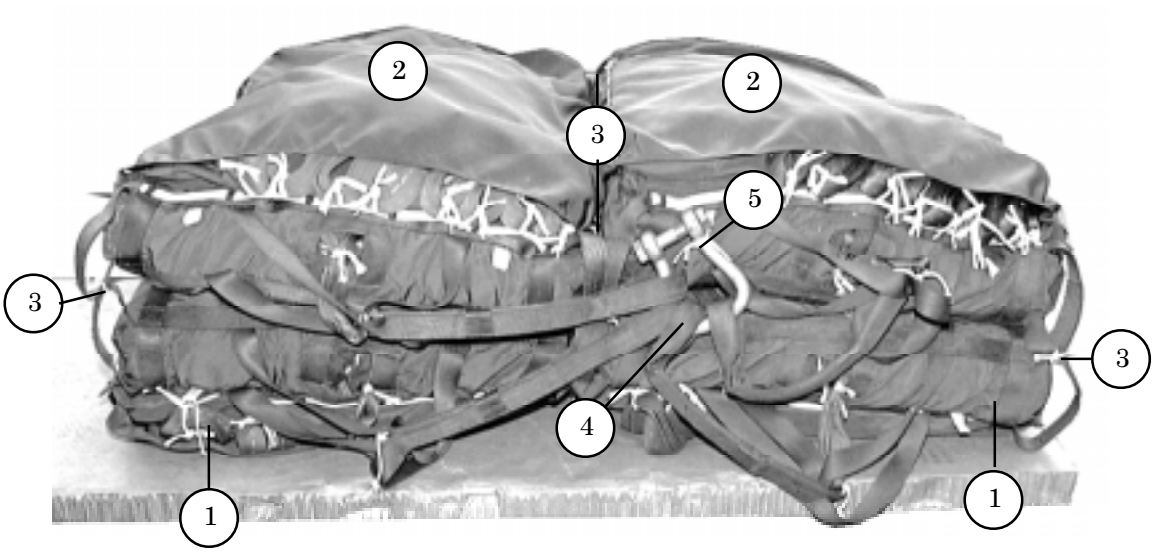

1. Set two parachutes side by side on the load with the riser compartments down and with bridles toward the front of the platform.

2. Set two parachutes side by side on top of the two parachutes in step 1 above with the riser compartments up.

3. Tie the four center front and four center rear carrying handles together with one turn single length of type III nylon cord. Tie the outside carrying handles together with type III nylon cord.

4. Fit the bridle loops on the arms of a large clevis.

5. For the nylon bag, tie the clevis to the top right parachute's left parachute restraint strap loop with a length of one turn double type I, 1/4-inch cotton webbing. Secure with a surgeon's knot and a locking knot. For the cotton bag, tie the clevis to the top right parachute's left bridle attaching loop with a length of one turn double type I, 1/4-inch cotton webbing. Secure with a surgeon's knot and a locking knot.

Figure 3-16. Four Parachutes Stowed

RESTRAINING TWO TO FOUR PARACHUTES

3-18. The following parachute restraint systems are used to restrain two to four cargo parachutes.

a. Two Parachutes. The restraint system for two cargo parachutes consists of two lengths of type VIII nylon webbing (restraint straps) and two multicut parachute release straps for the stacked configuration and one length of type VIII nylon webbing (restraint strap) and two multicut parachute release straps for the side by side configuration as shown in Figures 3-17 through 3-19.

NOTE: When a stowage platform is used, the restraint strap runs through the platform. Always use multicut parachute release straps in pairs.

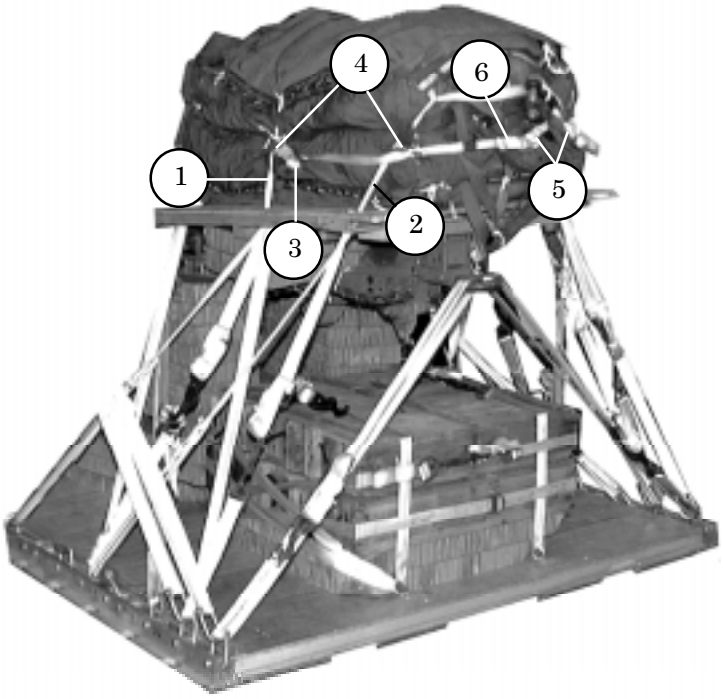

(1) Run the restraint strap through the center carrying handles on the left side of the parachutes, up to the top of the parachutes, and down through the center carrying handles on the right side of the parachutes. Tie the ends of the restraint strap to the load as described in Figure 3-22.

(2) Run the second restraint strap through the front carrying handles of the left parachutes. Run the restraint strap through the bridle attaching loops of the top parachute for the cotton bags or through the parachute restraint strap loops for the nylon bag, and down through the front carrying handles of the right parachutes. Tie the ends of the restraint strap to the load as described in Figure 3-22.

(3) Remove guillotine knives number 3 (Figure 2-3) from each multicut parachute release strap. Fold the unused loops, and tape the folds in place.

Figure 3-17. Multicut Parachute Release Straps Installed on Two Stacked Parachutes

4. Close each knife around the restraint strap, with the knurled nut out between the top and bottom carrying handles. Safety tie the guillotine knife as shown in Figure 3-18.

5. Tie the free end of each release strap to the large clevis grouping the bridles. Use three alternating half hitches and an overhand knot in each running end. Make sure that the parachute release straps are not routed under the parachute restraint or parachute bridles. Make sure that the release straps are shorter than the parachute bridles to ensure that the deployment force is applied to the strap before the bridles.

6. Fold or roll any excess strap, and tape the folds in place.

Figure 3-17. Multicut Parachute Release Straps Installed on Two Stacked Parachutes (continued)

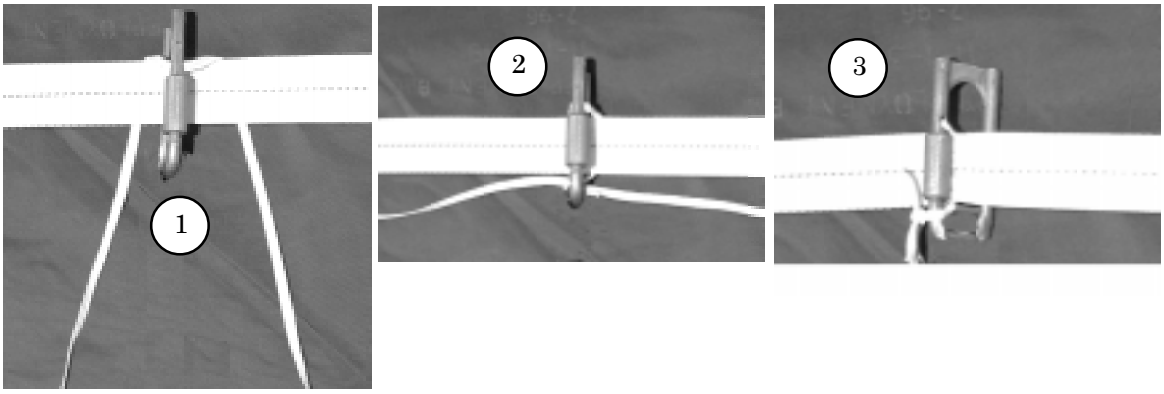

1. Close the knife around the restraint strap, knurled nut out. Thread a length of type I, 1/4-inch cotton webbing through the safety tie hole. Even the ends of the webbing, and run them under the restraint strap, and alongside the release knife.

2. Thread the end of the webbing on the left side of the knife rightward behind the bar of the knife. Thread the other end of webbing left in a like manner.

3. Bring the ends of the webbing up over the top of the bar. Tie the ends of the webbing together with a surgeon's knot and a locking knot.

Figure 3-18. Guillotine Knife Safety Tied

NOTE: When a stowage platform is used, the restraint strap runs through the platform. Always use multicut parachute release straps in pairs.

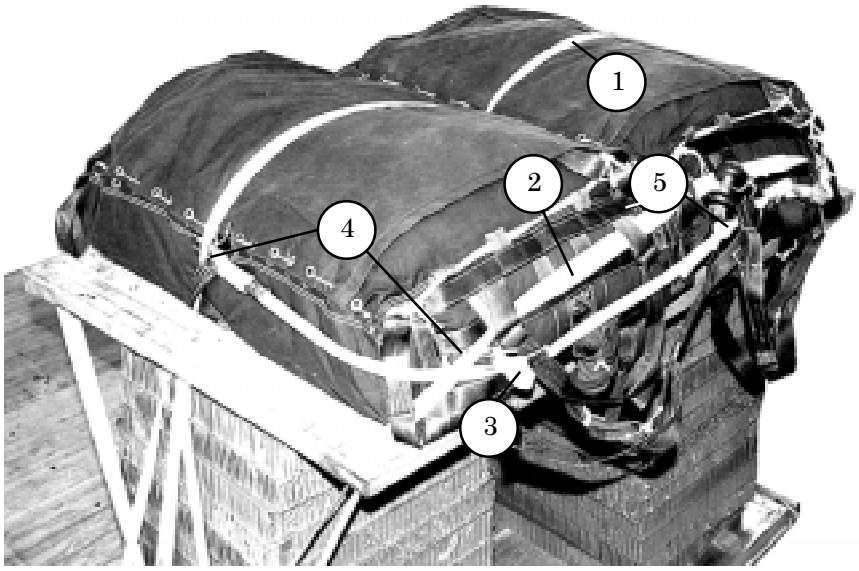

1. Run the restraint strap through the center carrying handle on the left side of the parachute. Run the restraint strap over the top of the parachute, and down through the left center carrying handle. Continue to run the restraint strap up through the right inside carrying handle. Run the restraint strap over the right parachute and down through the right outside carrying handle. Tie the ends of the restraint strap to the load as described in Figure 3-22.

2. Run the second restraint strap through the outside front carrying handle of the bottom left parachute, up through the top left front carrying handle and both bridle attaching loops of the top parachute for the cotton bags or through the parachute restraint strap loops for the nylon bag, and down through the outside front carrying handles of the top and bottom right parachute. Tie the restraint strap to the load as described in Figure 3-22.

3. Remove guillotine knife number 3 (Figure 2-3) from each of two multicut parachute release straps. Fold the unused loops, and tape the folds in place.

4. Close and safety tie the guillotine knives as shown in Figure 3-18.

5. Tie the free end of each release strap to the large clevis grouping the bridles. Use three alternating half hitches and an overhand knot in each running end. Make sure that the parachute release straps are not routed under the parachute restraint or parachute bridles. Make sure that the release straps are shorter than the parachute bridles to ensure that the deployment force is applied to the strap before the bridles.

6. Fold or roll any excess strap, and tape the folds in place.

Figure 3-19. Multicut Parachute Release Straps Installed on Two Side-by-Side Parachutes

b. Three and Four Parachutes. The restraint system for three and four cargo parachutes consists of two lengths of type VIII nylon webbing (restraint straps) and two multicut parachute release straps. Restrain three and four cargo parachutes as shown in Figures 3-20 and 3-21.

Note: Always use multicut parachute release straps in pairs.

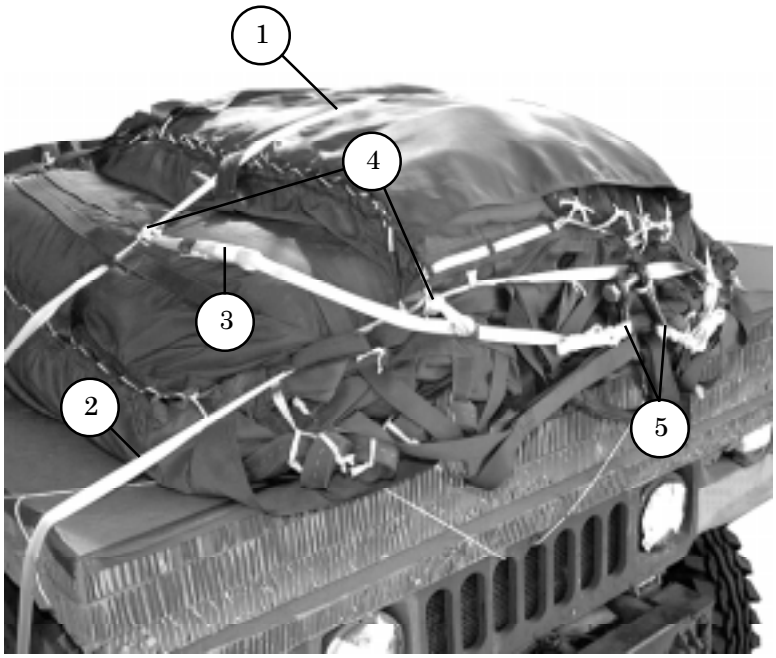

1. Run the first restraint strap through the center carrying handles on the left side of the parachutes. Run the restraint strap over the top of the parachute and down through the right carrying handles. Tie the ends of the restraint strap to the load as described in Figure 3-22.

2. Run the second restraint strap through the outside front carrying handle of the bottom left parachute, up through the top left front carrying handle and both bridle attaching loops of the top parachute for the cotton bags or through the parachute restraint strap loops for the nylon bag, and down through the outside front carrying handles of the top and bottom right parachute. Tie the restraint strap to the load as described in Figure 3-22.

3. Remove guillotine knife number 3 (Figure 2-3) from each of two multicut parachute release straps. Fold the unused loops, and tape the folds in place.

4. Close and safety tie the guillotine knives as shown in Figure 3-18.

5. Tie the release straps to the large clevis as in step 4, Figure 3-19.

NOTE: Place the knives around the restraint straps between the carrying handles of the top and bottom parachutes.

Figure 3-20. Three Parachutes Restrained Using Multicut Parachute Release Straps

Note: Always use multicut parachute release straps in pairs.

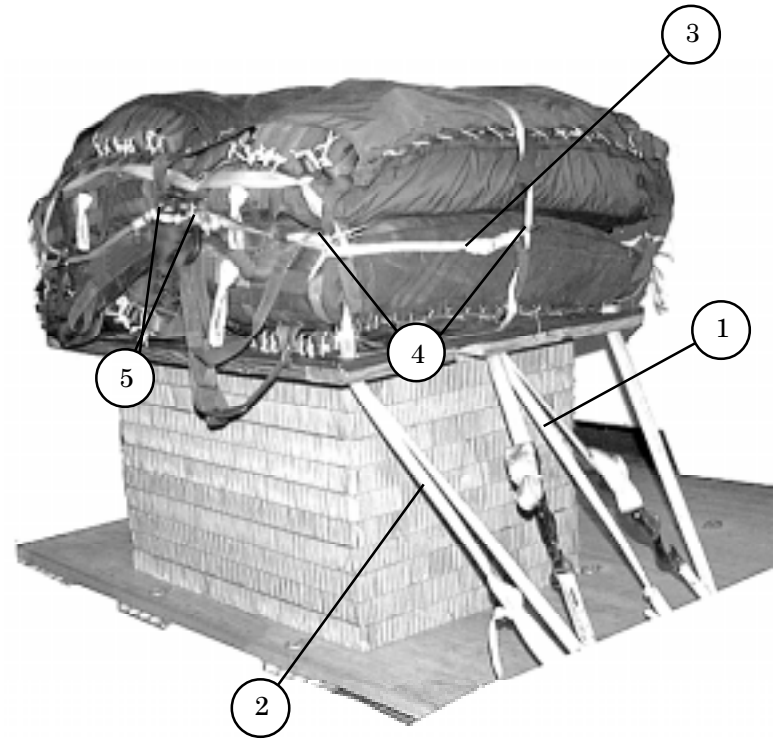

1. Run the restraint strap through the center carrying handles on the left side of the parachutes. Run the restraint strap over the top of the parachute, and down through the left inside center carrying handle. Continue to run the restraint strap up through the right inside center carrying handle. Run the restraint strap over the right parachute and down to the right outside carrying handles. Tie the ends of the restraint strap to the load as described in Figure 3-22.

2. Run the second restraint strap through the outside front carrying handles of the left parachutes. Run the restraint strap through the bridle attaching loops of the top parachutes for the cotton bags or through the parachute restraint strap loops for the nylon bag, and down through the outside front carrying handles of the right parachutes. Tie the ends of the restraint strap to the load as described in Figure 3-22.

3. Remove guillotine knife number 3 (Figure 2-3) from each of two multicut parachute release straps. Fold the unused loops, and tape the folds in place.

4. Close and safety tie the guillotine knives as shown in Figure 3-18.

5. Tie the release straps to the large clevis as in step 4, Figure 3-19.

NOTE: Place the knives around the restraint straps between the carrying handles of the top and bottom parachutes.

Figure 3-21. Four Parachutes Restrained Using Multicut Parachute Release Straps

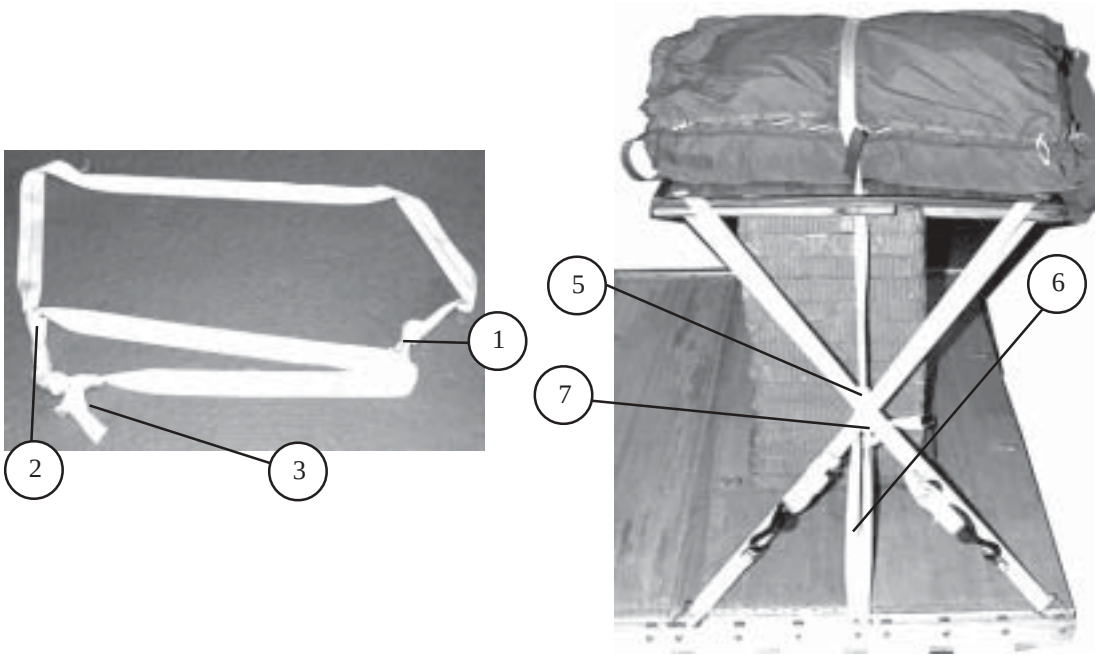

When the ends are tied together-

1 Tie a loop in one end of the restraint strap with an overhand knot.

2 Tie a trucker's hitch a suitable distance from the other end of the restraint strap.

3 Run the free end of the restraint strap through the first loop and then back through the trucker's hitch.

4 Pull on the free end until the strap is taut, and tie the free end of the strap with three alternating half hitches and with an overhand knot in the running end (not shown).

When the ends are tied to the load-

5 Tie a trucker's hitch a suitable distance in each end of the restraint strap.

6 Run each free end of the strap through or around the indicated point on the load and back up through the trucker's hitch.

NOTE: The indicated point for tying the parachute restraint strap to the load will be given in the specific rigging chapter.

7 Pull on both ends of the restraint strap at the same time. When the strap is taut, tie the ends with three alternating half hitches and an overhand knot in the running end.

Figure 3-22. Restraint Strap Tied

SECTION IV - DEPLOYMENT LINE AND PARACHUTE

ATTACHING THE DEPLOYMENT LINE

3-19. The 3-foot (4-loop), type XXVI nylon webbing sling is used as the deployment line for DRAS airdrop and connects the deployment parachute to the cargo parachutes. Follow the procedures as shown in Figure 3-23 to connect the deployment line to the deployment parachute.

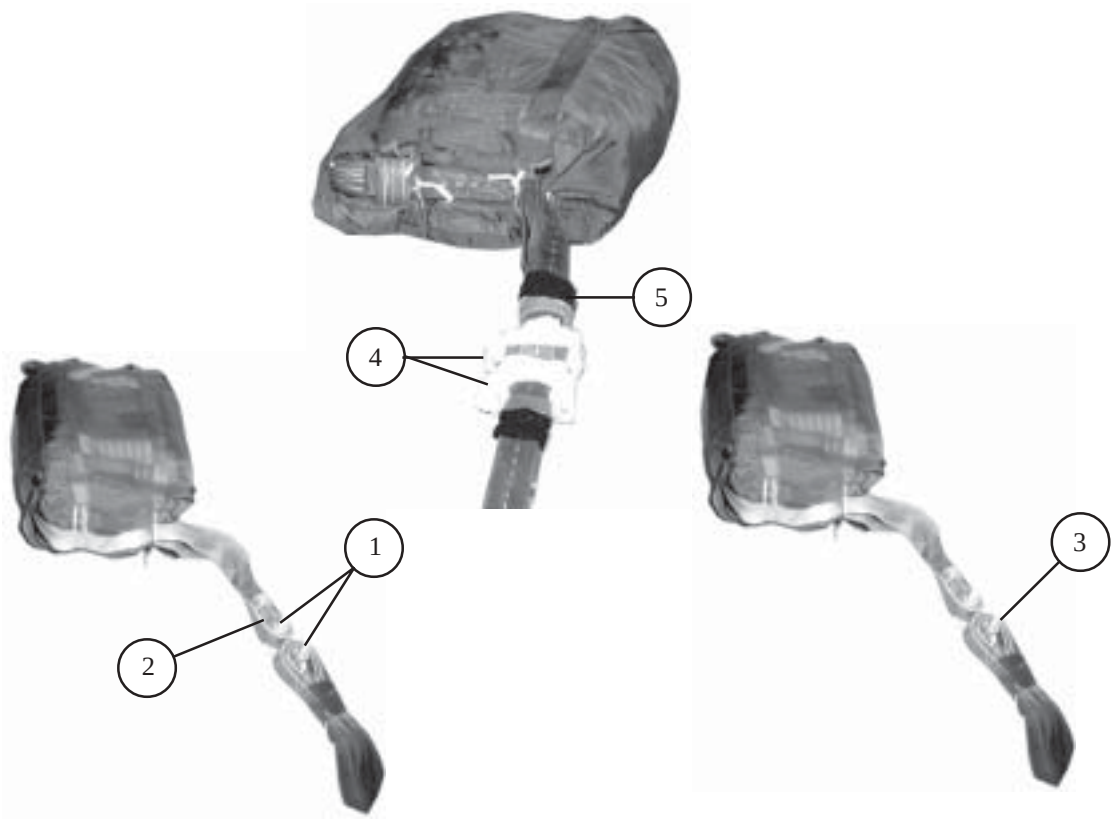

1. Place a large spacer on each bolt of the 3 3/4-inch two-point link.
2. Fit the adapter web loop on one of the spacers attached in step 1 above.
3. Fit the loop of the 3-foot deployment line on the free spacer of the 3 3/4-inch two-point link.
4. Bolt the side plate to the 3 3/4-inch two-point link. Use a wrench to tighten the nuts. Run a length of tape around the link and over each nut and bolt end.
5. Run a length of cloth-backed tape around the adapter web keeper.

Figure 3-23. Deployment Line Attached

POSITIONING AND SECURING THE DEPLOYMENT PARACHUTE AND LINE

3-20. Position and secure the deployment parachute on two parachutes stacked or three parachutes as shown in Figure 3-24.

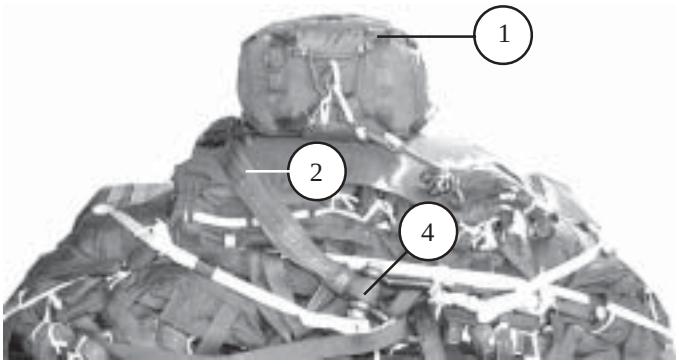

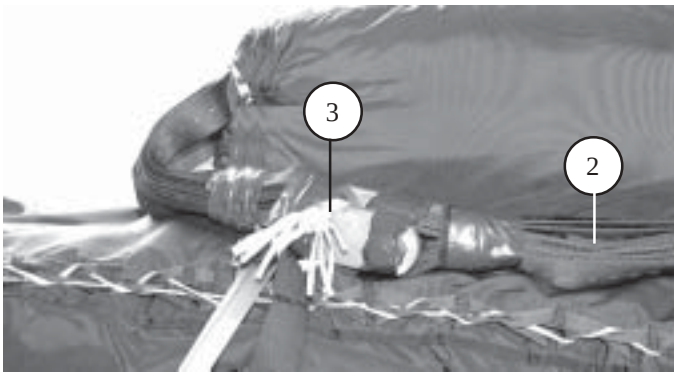

1. Position the deployment parachute centered on top of the G-11D cargo parachutes with the apex to the front and the taped V-rings facing up.
2. Route the deployment line around the right side of the deployment parachute.
3. Safety tie the 3 3/4-inch two-point link to the right center carrying handle of the G-11D parachute with five lengths of type I, 1/4-inch cotton webbing.
4. Connect the other end of the deployment line to the bolt of the large clevis that groups the cargo parachute bridles together.

Figure 3-24. Deployment Parachute and Line Positioned and Secured on Two Parachutes Stacked or Three Parachute Loads

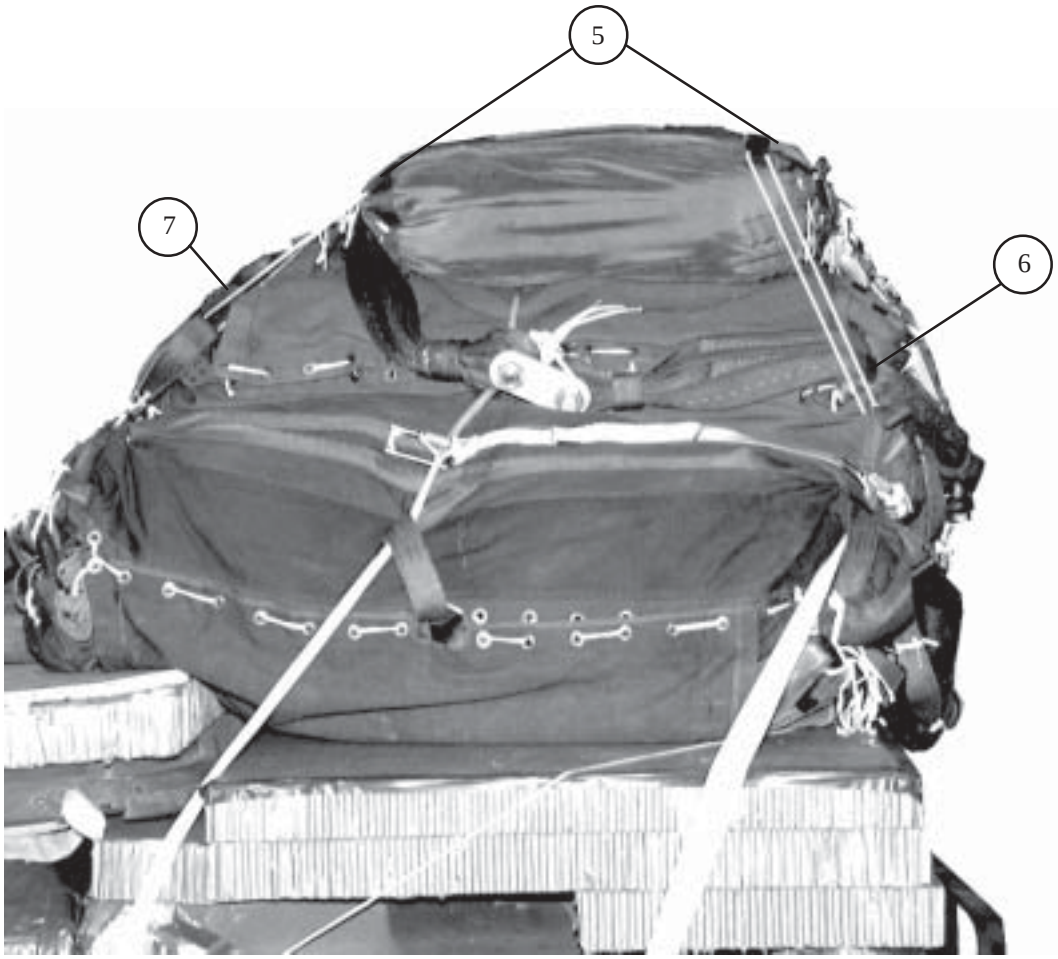

5 Route a length of type I, 1/4-inch cotton webbing through each top clustering loop on the deployment parachute deployment bag.

6 Tie the lengths of type I, 1/4-inch cotton webbing on the front clustering loops to the front carrying handles on the G-11D cargo parachutes.

7 Tie the lengths of type I, 1/4-inch cotton webbing on the rear clustering loops to the rear carrying handles on the G-11D cargo parachutes.

Figure 3-24. Deployment Parachute and Line Positioned and Secured on Two Parachutes Stacked or Three Parachute Loads (Continued)

3-20.1. Position and secure the deployment parachute on two parachutes side-by-side or four parachutes as shown in Figure 3-24.1.

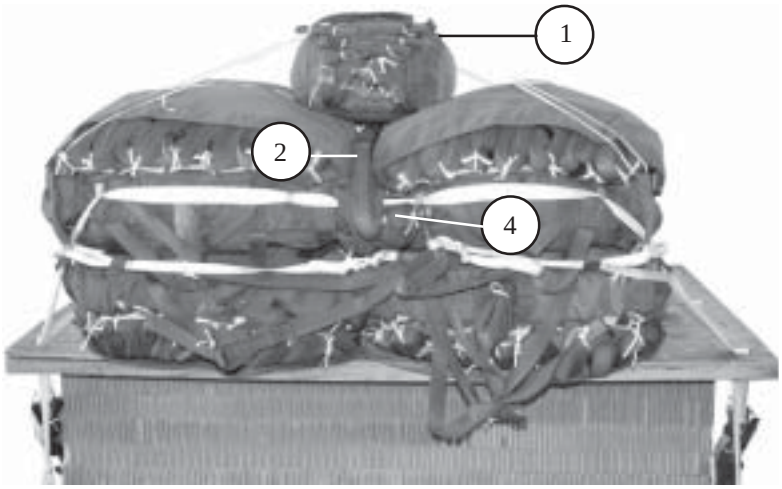

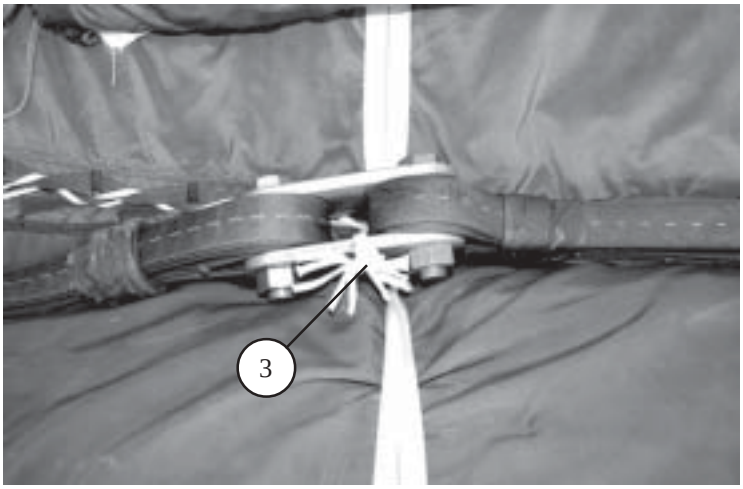

1. Position the deployment parachute centered on top of the G-11D cargo parachutes with the apex to the front and the taped V-rings facing up.
2. Route the deployment line under the deployment parachute.
3. Safety tie the 3 3/4-inch two-point link to the center carrying handle of the G-11D parachute with five lengths of type I, 1/4-inch cotton webbing.
4. Connect the other end of the deployment line to the bolt of the large clevis that groups the cargo parachute bridles together.

Figure 3-24.1. Deployment Parachute and Line Positioned and Secured on Two Parachutes Side-by-Side or Four Parachute Loads

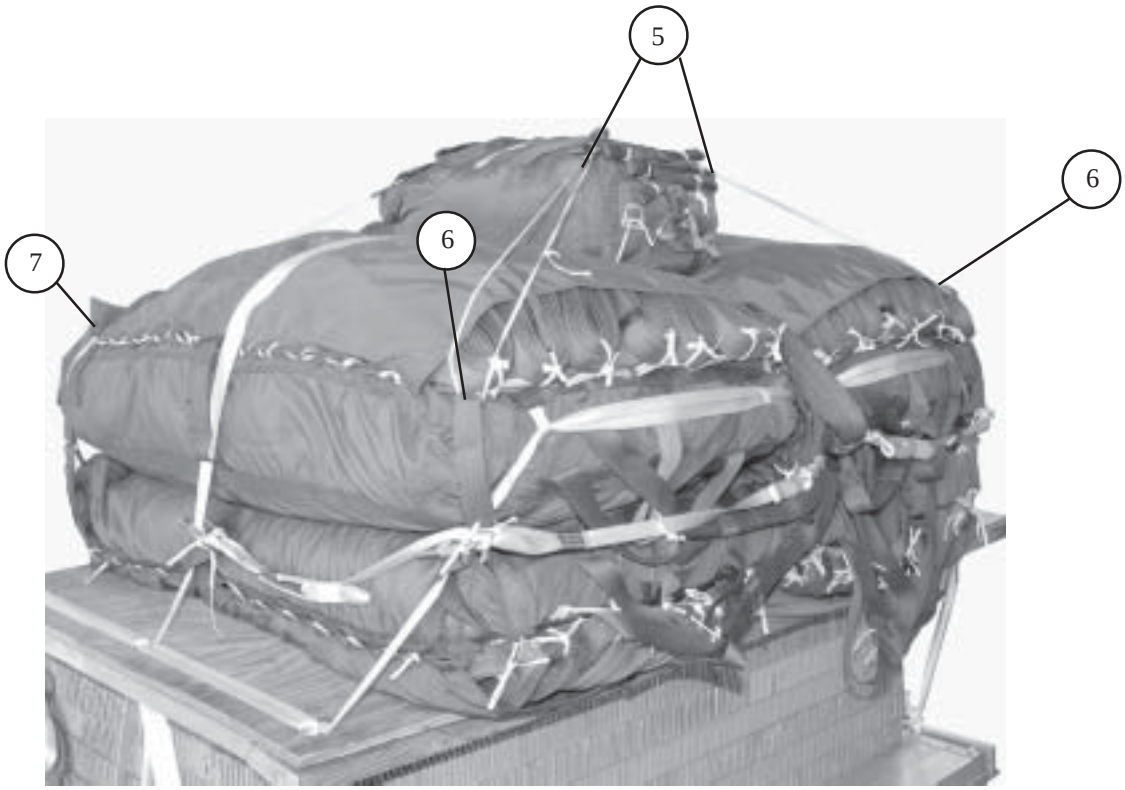

5 Route a length of type I, 1/4-inch cotton webbing through each top clustering loop on the deployment parachute deployment bag.

6 Tie the lengths of type I, 1/4-inch cotton webbing on the front clustering loops to the front carrying handles on the G-11D cargo parachutes.

7 Tie the lengths of type I, 1/4-inch cotton webbing on the rear clustering loops to the rear carrying handles on the G-11D cargo parachutes.

Figure 3-24.1. Deployment Parachute and Line Positioned and Secured on Two Parachutes Side-by-Side or Four Parachute Loads (Continued)

SECTION V- RELEASE ASSEMBLIES

M-1 CARGO PARACHUTE RELEASE

3-21. Test, attach, and safety the M-1 cargo parachute release as follows:

a. Testing Timer. Before each use, seat, arm, and test the delay timer as shown in Figures 3-25 through 3-27.

(1) Align and center the upper suspension link with the release side plates.

CAUTION
If the timer is not correctly seated in the upper position in the release when it is armed, the keys will not fit into the slots in the back side plate and could damage the timer.

(2) Reach between the side plates, and slide the timer up until the toggles fit in the toggle lock slides, making sure the timer slides freely. You should be able to see the winding shaft of the timer through the guide block winder access hole.

Figure 3-25. Delay Release Timer Seated

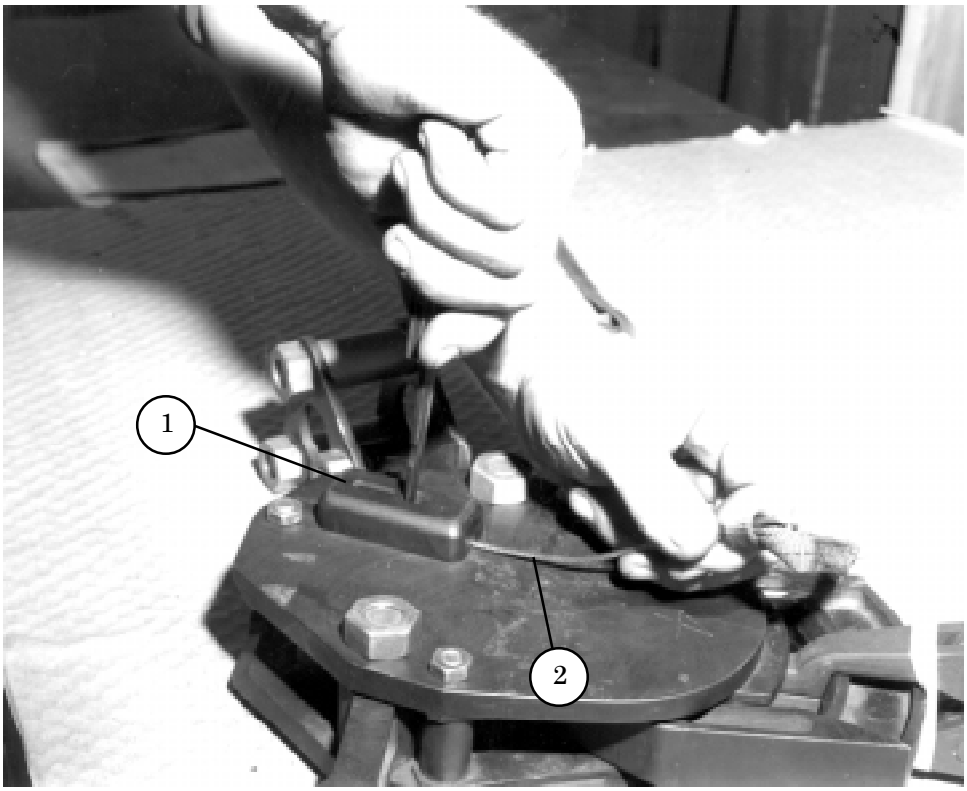

1 Put the tip of a flat-tip screwdriver through the guide block winder access hole and into the slot in the timer winding shaft. Gently turn the shaft one-quarter turn to the right and stop, holding the shaft with the screwdriver.

NOTE: If the winding shaft is hard to turn, hold the shaft with the screwdriver and move the timer around until the keys align with the slots in the back plate.

2 Hold the shaft, and push the arming wire down through the hole in the guide block and the hole in the winding shaft.

NOTE: When the timer is correctly armed, about 1/2 inch of the arming wire can be seen through the slot below the guide block winder access hole.

Figure 3-26. Timer Armed

NOTE: A delay release timer will be tested before each use.

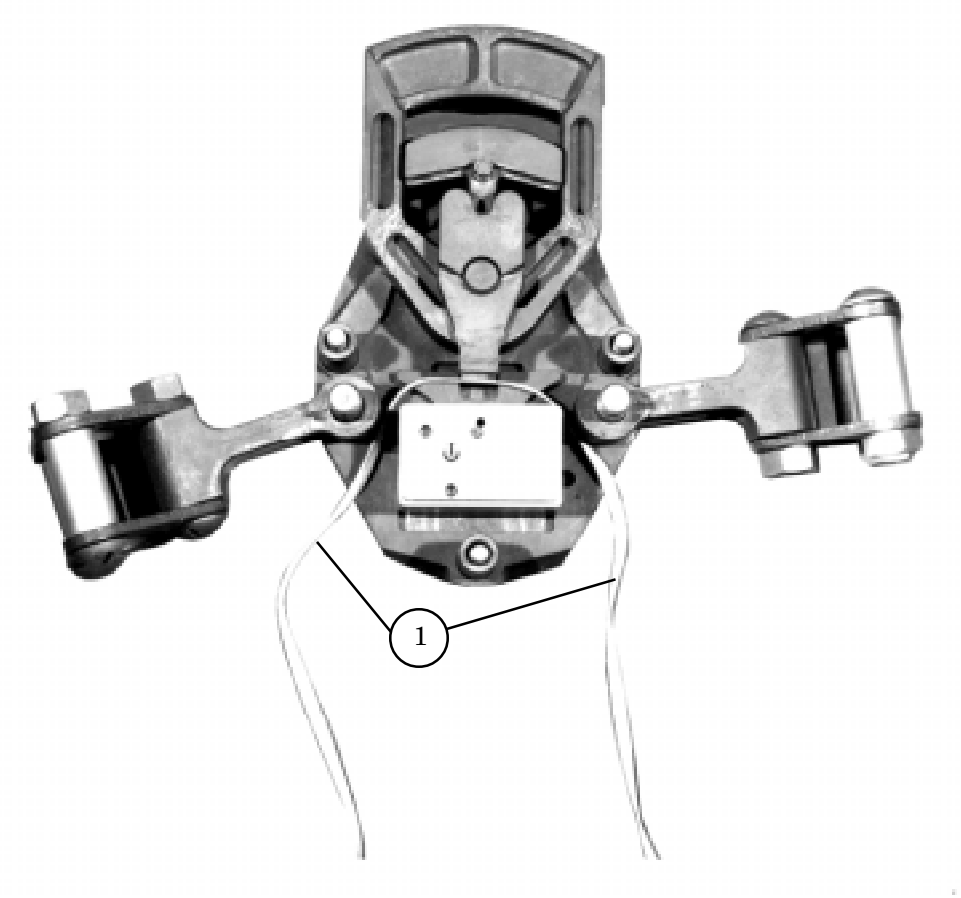

(1) Pass a length of type I, 1/4-inch cotton webbing up between the release side plates, over and around the center of the timer, and back down between the side plates. The side plate and a toggle lock slide have been removed to show how the webbing passes around the timer.You may use a length of wire to help you pass the webbing around the timer.

Figure 3-27. Timer Tested

CAUTION
Do not over tighten the face side plate. Make sure the bolts are tightened in an alternating sequence.

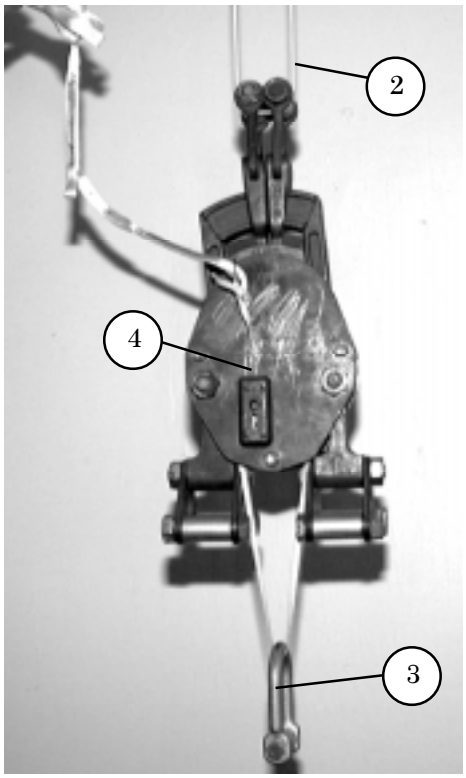

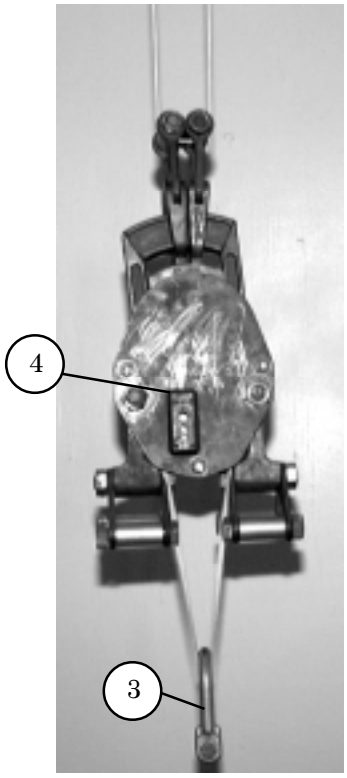

2 Hang the release in a straight, level position.

3 Tie a 10-ounce weight, such as a platform clevis with bolt or a parachute release connector, without the nut and bolt, to the type I, 1/4-inch cotton webbing.

4 Pull the arming wire from the timer. Count the seconds from the time the wire is pulled until the timer falls within the release.

NOTE: If the timer fails to fall after the alloted time (12 to 16 seconds), remove the side plate and check the four screws holding the arming wire guide block to the side plate for burrs. If the screw heads are burred, remove the burrs by filing or replace the screws. Retest the timer. If there is a second failure, remove and replace the timer.

Figure 3-27. Timer Tested (Continued)

b. Preparing, Attaching, and Safety Tieing Release. Prepare, attach, and safety tie the M-1 cargo parachute release as shown in Figures 3-28 through 3-30.

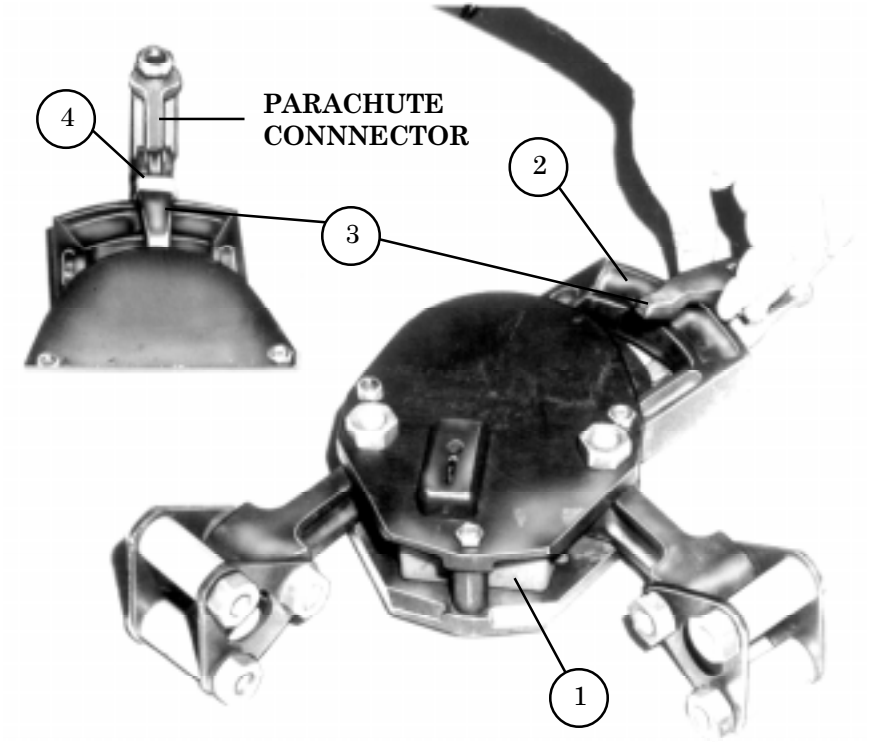

1 Use an M-1 release with a tested timer and make sure that the delay release timer is down in the housing of the release.

2 Move the upper suspension link to the right or the left as far as it will go.

3 Open the arms of a parachute connector, and fit the arms on the upper suspension link with the tips together in the groove of the retaining clamp.

NOTE: One parachute connector will be fitted to the upper suspension link for each cargo parachute used on the load.

4 Fit a retainer band around the parachute connector to aid in assembly.

Figure 3-28. Parachute Connector Fitted to Upper Suspension Link of M-1 Release

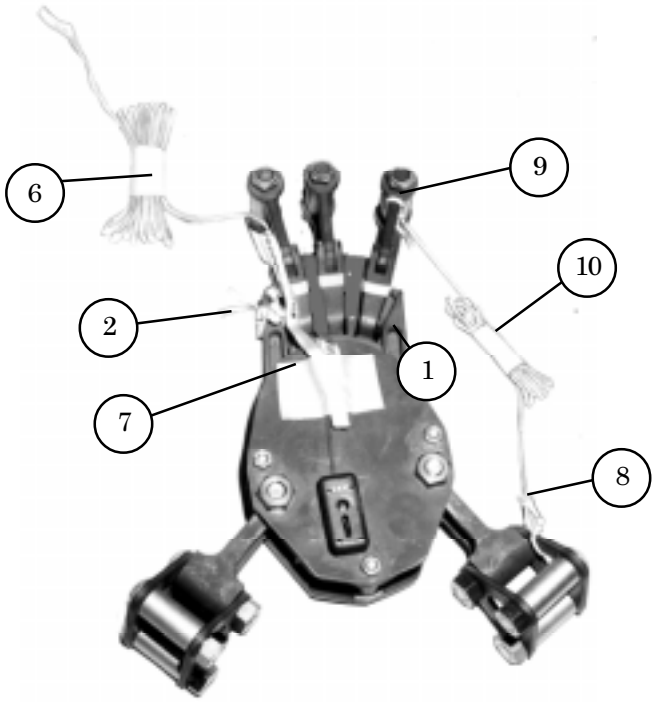

1. Move the upper suspension link back to the center of the release and arm the timer as indicated in Figures 3-23 and 3-24.

2. Safety tie the arming wire lanyard to the upper suspension link with a double length of type I, 1/4-inch cotton webbing with a surgeon's knot and a locking knot.

CAUTION

The end loop of the arming wire may pull free from the crimping sleeve during parachute deployment. To ensure that the arming wire disengages from the timer stem, an arming wire safety tie must be installed on all arming wires prior to use on an airdrop operation.

Figure 3-29. M-1 Release Prepared

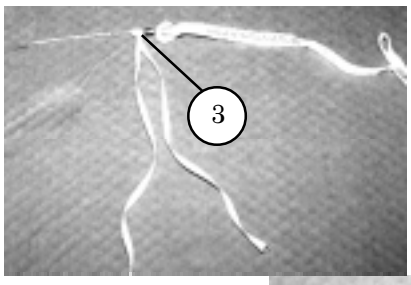

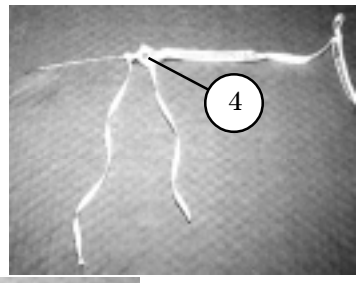

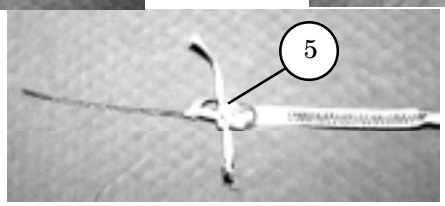

NOTE: With the arming wire lanyard attached to the arming wire loop, the arming wire loop shall be designated as the top. Install the safety tie as follows:

This safety tie should be inspected at the joint airdrop load inspection, before and after loading.

3 Girth hitch a 12-inch length of 1/4-inch cotton webbing on the safety wire just below the metal fastener.

4 Route one running end of the 1/4-inch cotton webbing through the looped ends of the arming wire and lanyard.

5 After ensuring there is 1/2 inch to 1 inch of slack in both running ends, tie a surgeon's knot and locking knot in the 1/4-inch cotton webbing.

6 Fold the slack in the lanyard, and tape the folds in place with one turn of masking tape.

7 Fold the slack in the lanyard, between the safety tie and the arming wire, and tape the fold to the face side plate with one piece of masking tape.

NOTE: Include the following data on the masking tape: name, date, and timer seconds.

8 Tie one end of a 5-foot length of type III nylon cord (dragline) to one side of the lower suspension link.

9 Tie the other end of the dragline to a parachute connector.

10 Fold the slack in the dragline and tape the folds in place with one turn of masking tape.

Figure 3-29. M-1 Release Prepared (Continued)

CAUTION

Place the release on the load with the parachute connectors toward the front of the platform and with the guide block up. Bolt the suspension slings to the lower suspension links so that they will not change position when the load is suspended. Make sure the arming wire lanyard is routed over all items.

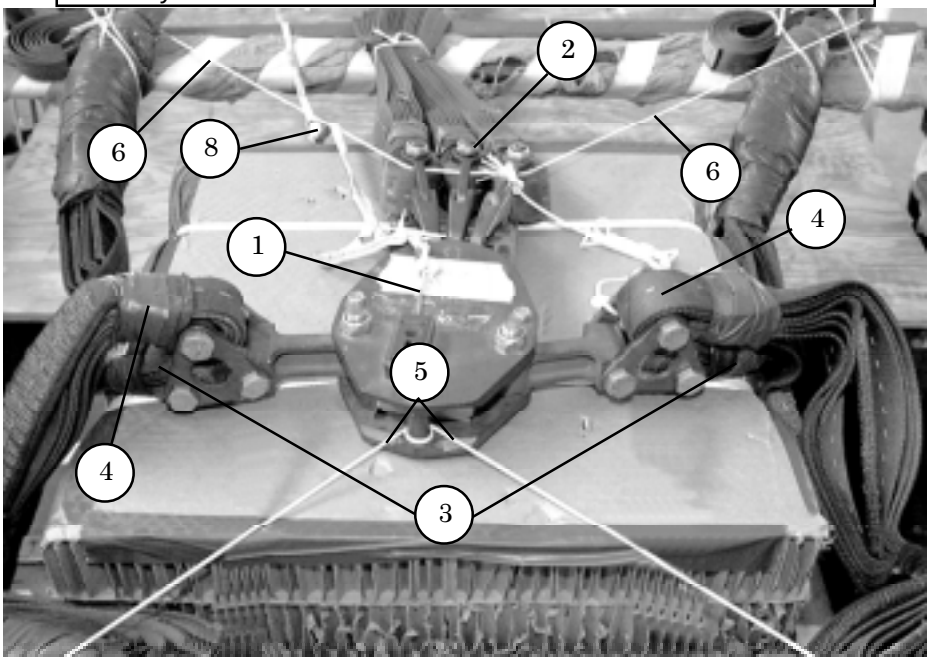

1. Put the release on the load as instructed in the specific rigging chapter for the load.
2. Bolt the riser extensions of the G-11D cargo parachutes to the parachute connectors already fitted to the release.
3. Attach the front suspension slings to the lower bolts of the lower suspension link. The front slings will have a half twist towards the parachutes.
4. Attach the rear suspension slings to the top bolts of the lower suspension link.

NOTES: 1. The keeper at each end of the sling must be drawn snugly against the object on which the sling is fitted.
2. Suspension slings on DRAS loads will have the nylon buffers removed to fit on the lower suspension links of the M-1 parachute release assembly.

5. Run a length of type III nylon cord to encircle the lower spacer, and tie the ends of the cord to points on the rear of the load or platform.
6. Run a length of type III nylon cord through the parachute connectors, and tie the ends of the cord to points on the front of the load or platform.
7. Tie the lanyard to a carrying handle of a parachute with three alternating half hitches and an overhand knot in the running end (not shown).
8. Fold the slack in the lanyard, and tape the folds in place with one turn of masking tape.

Figure 3-30. M-1 Release Attached and Safetied to Load

ATTACHING PARACHUTE RISERS TO THE PARACHUTE RELEASE

3-22. Lay the parachute release on top of the load with the bolt end of the parachute connectors toward the cargo parachutes. Bolt the parachute riser extensions to the parachute connectors of the M-1 parachute release as shown in Figure 3-31.

NOTE: Bolt the parachute riser extensions to the parachute connectors from rigger's left to right. They must be in the numerical order given for four parachute loads.

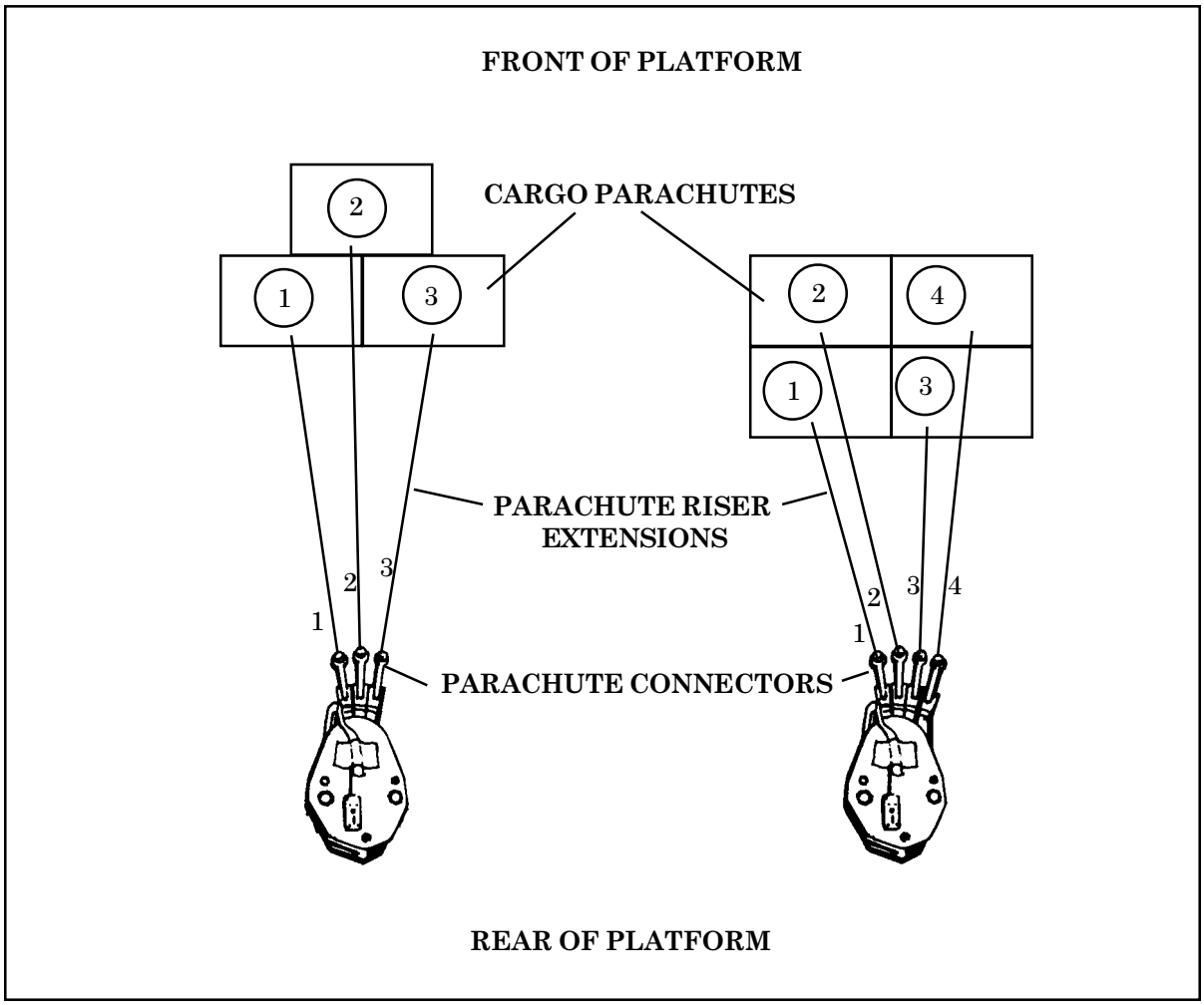

Figure 3-31. Three and Four Parachute Riser Extensions Attached to the Parachute

SECTION VI - ATTITUDE CONTROL SYSTEM (ACS)

ATTITUDE CONTROL SYSTEM

3-23. Assemble and inspect two attitude control systems for each load as follows:

a. Assembling the ACS. Assemble the ACS as shown in Figure 3-32.

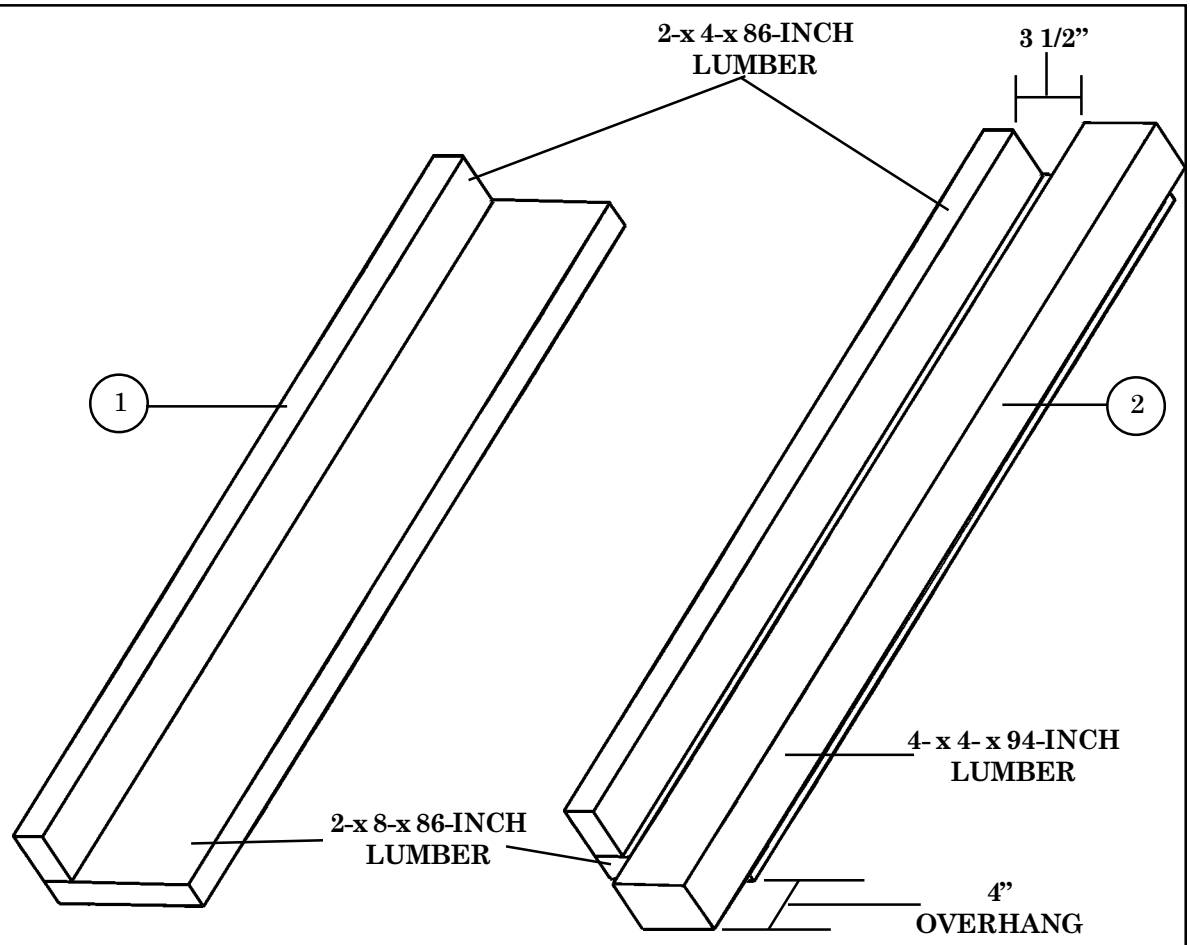

1. Place a 2-x 4-x 86-inch piece of lumber flush along the rear edge of a 2-x 8-x 86-inch piece of lumber and nail at 6 inch intervals using 16d nails.
2. Center a 4-x 4-x 94-inch piece of lumber on the 2-x 8-x 86-inch lumber, 3 1/2-inches from the the 2-x 4-x 86-inch lumber. Nail at 6 inch intervals using 16d nails.

NOTE: The 4-x 4-x 94-inch lumber should over hang each end of the 2-x 8-x 86-inch lumber by 4 inches.

Figure 3-32. Attitude Control System Assembled

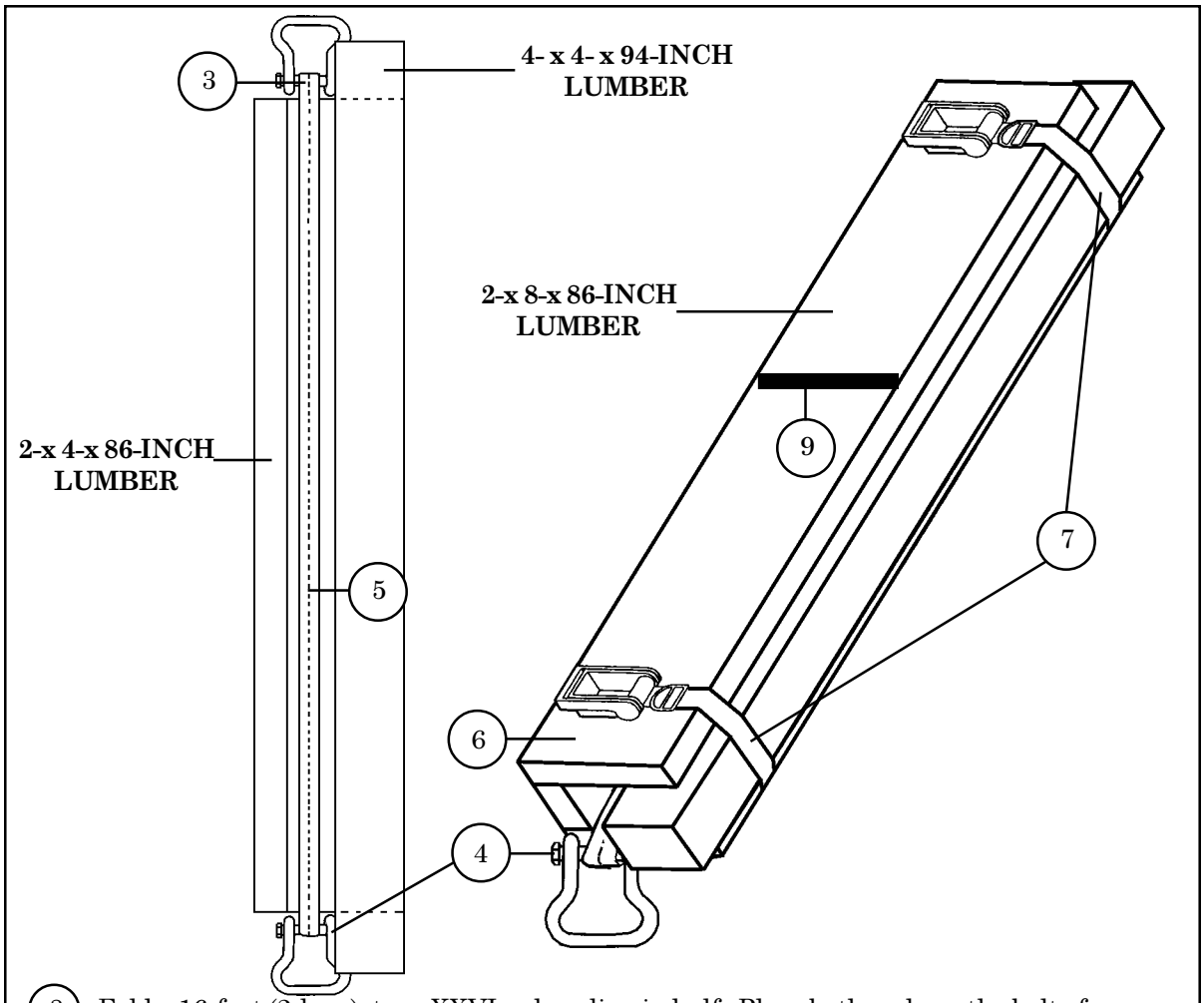

3 Fold a 16-foot (2-loop), type XXVI nylon sling in half. Place both ends on the bolt of a medium or large clevis.

4 Place the bolt of a second medium or large clevis through the fold of the sling.

5 Center the folded sling and clevises in the trough of the ACS with the clevises extending from each end.

6 Place a 2-x 8-x 86-inch piece of lumber flush along the rear edge of the 2-x 4-x 86-inch piece of lumber. Nail the lumber at 6 inch intervals along both sides using 16d nails.

NOTE: Ensure NO nails are protruding through the inside of the ACS.

7 Route two CGU-1/B tiedown straps or two A7A cargo slings around the ACS 4 inches from each end.

8 Pad the CGU-1/B tiedown straps or A7A cargo slings with felt and secure the felt with cloth-backed tape (not shown).

9 Mark the center of the ACS so it is visible from the ground.

Figure 3-32. Attitude Control System Assembled (continued)

b. Inspecting the ACS. Inspect the ACS for the following items:

(1) Lumber. Inspect the lumber for splits or excess damage. If the damage interferes with the proper functioning of the ACS, discard and use a new ACS.

(2) Slings. Inspect the slings according to TM 10-1670-296-20&P/ TO 13C7-49-2. Ensure the slings move freely through the ACS.

(3) Clevises. Inspect the clevises according to TM 10-1670-296-20&P/ TO 13C7-49-2.

(4) Servicable slings and clevises may be used on another ACS.

SECTION VII - INSTALLING OUTRIGGER ASSEMBLY

PLATFORM FITTING ASSEMBLY (PFA) WELDMENT AND LINK ASSEMBLIES

3-24. The PFA weldment and the link assembly are designed to be installed on either platform siderail. Assemble and install the PFA weldment and the link assembly on the DRAS platform according to TM 10-1670-268-20&P/TO13C7-52-22.

OUTRIGGER MAST AND FOOT

3-25. The outrigger mast and foot are interchangeable and may be used on either side of the platform. Assemble, install, and safety the mast and foot on the DRAS platform according to TM 10-1670-268-20&P/TO13C7-52-22 and as shown in Figures 3-33 through 3-36.

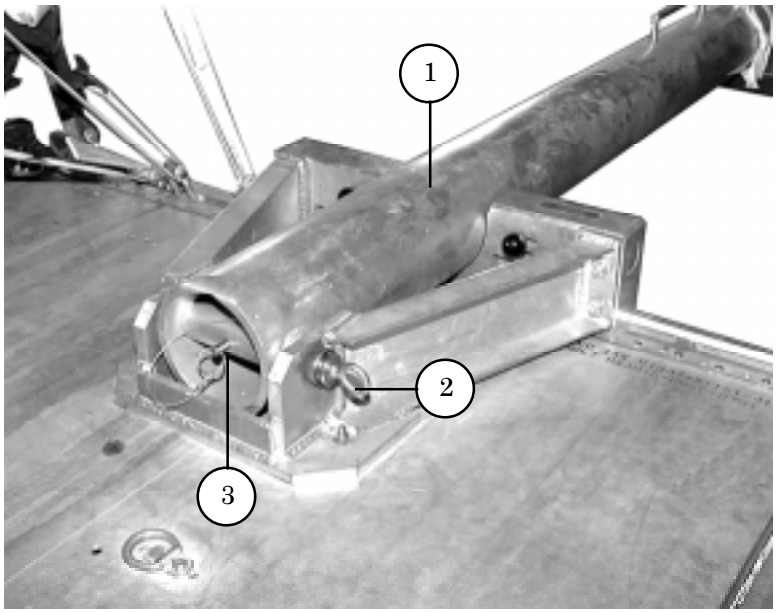

1. Place the mast in the PFA weldment in the horizontal position aligning the shaft hole in the mast with the sleeve bearings in the PFA weldment.
2. Insert the mast pivot pin through the bearing and the mast from rear to front.
3. Looking inside the bottom of the mast, align the hole in the mast pivot pin with the hole in the mast and insert the ball-lock pin.

Figure 3-33. Mast Installed

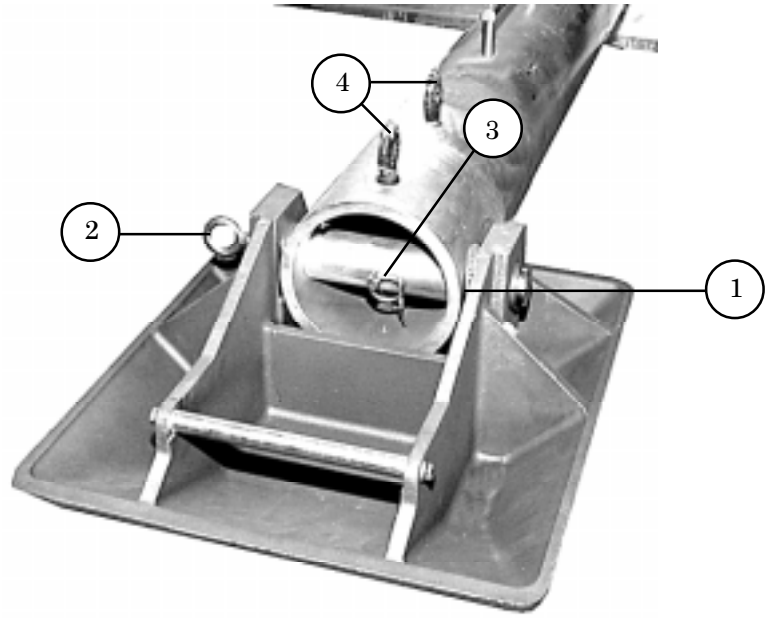

1. Place the foot at the end of the mast aligning the pivot pin hole in the mast with the sleeve bearings in the foot.
2. Insert the pivot pin through the bearing and the mast from rear to front.
3. Looking inside the end of the mast align the hole in the mast pivot pin with the hole in the mast and insert the ball-lock pin.
4. Tape the eyebolts with cloth-backed tape leaving the eyes open.
5. Repeat steps 1 through 4 on the opposite side.

Figure 3-34. Foot Installed

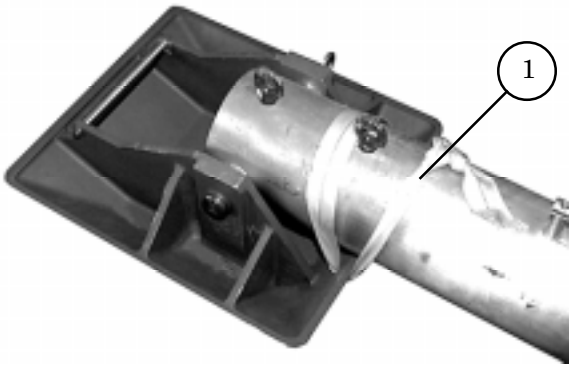

1. Place a length of type VIII nylon webbing between the eyebolts on the mast. Run the ends through the inside holes of the foot. Secure the ends together, with a trucker's hitch knot, on top of the mast. Repeat on the opposite side.

Figure 3-35. Foot Safety Tied

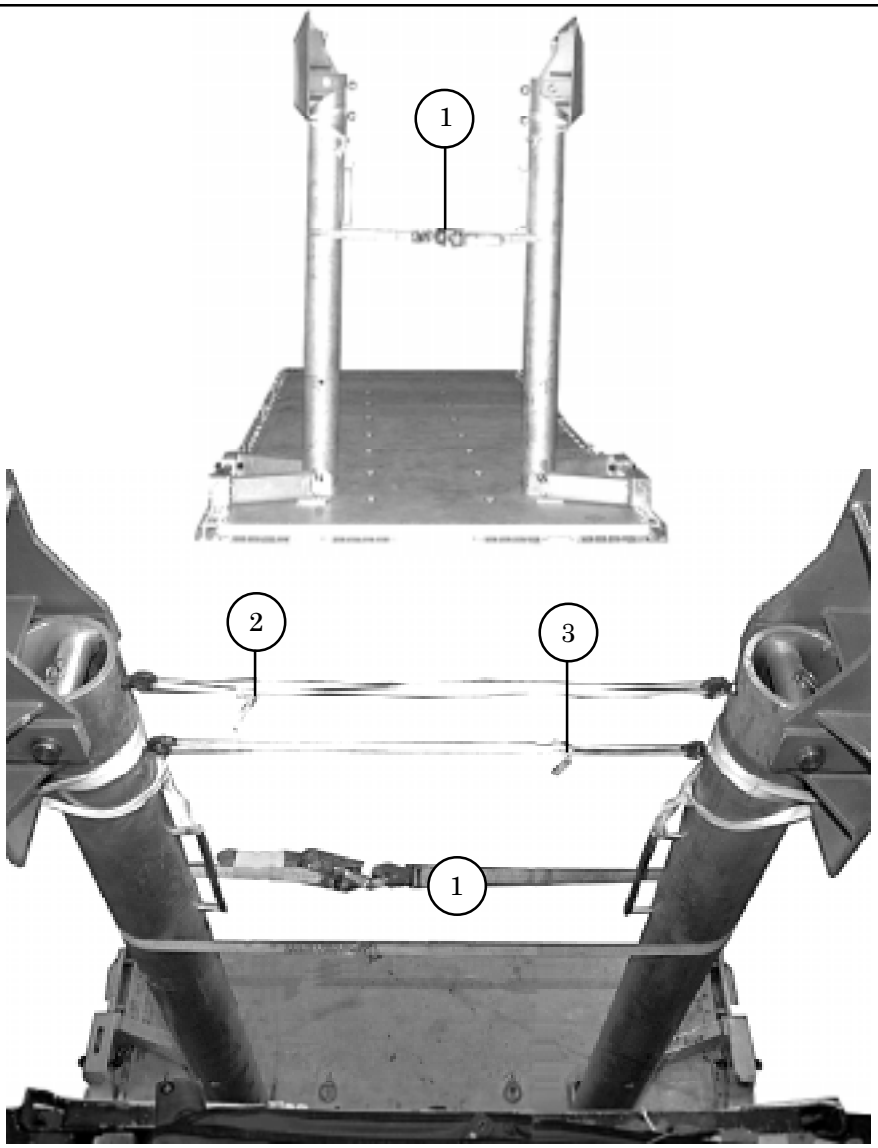

(1) Raise both outriggers to the vertical position and route a CGU-1B tiedown assembly around both masts.

NOTE: The CGU-1B tiedown assembly must be removed by the aircrew prior to airdrop.

(2) Form an outrigger vertical restraint tie by routing a length of 1/2-inch tubular nylon webbing through the top eyebolt on both masts. Tie the ends together 6 inches from the right mast eyebolt using a trucker's hitch.

(3) Form a second outrigger vertical restraint tie by routing a length of 1/2-inch tubular nylon webbing through the bottom eyebolt on both masts. Tie the ends together 6 inches from the left mast eyebolt using a trucker's hitch.

Figure 3-36. Masts Safety Tied

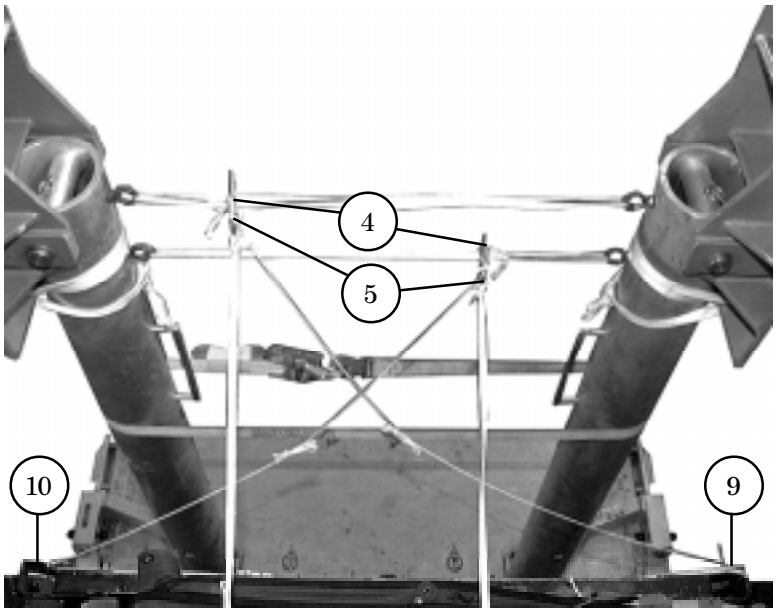

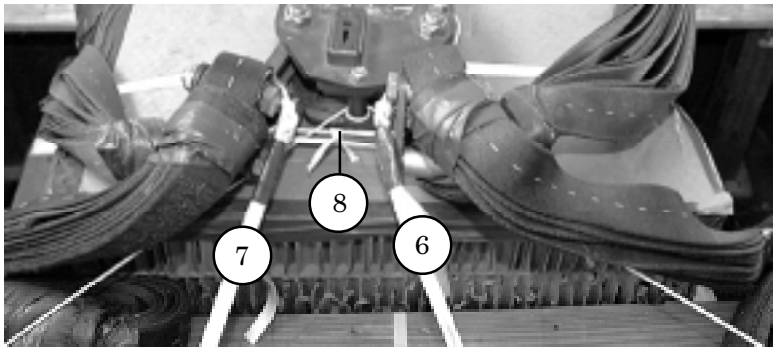

(4) Install and safety tie a guillotine knife around each outrigger vertical restraint tie as shown in Figure 3-18. Ensure the knives are installed against the knots.

(5) Tie a length of 1/2-inch tubular nylon webbing to the body of each guillotine knife. The length of the webbing is given in the specific chapter for the item being rigged.

(6) Tie the webbing from the right guillotine knife to the right lower suspension link of the M-1 parachute release assembly with three alternating half hitches and an overhand knot. Tape the running end to the 1/2-inch tubular nylon webbing.

(7) Repeat step 6 using the left guillotine release knife and the left lower suspension link.

(8) Tie the lower suspension links together as close as possible with one turn single, type I 1/4-inch cotton webbing. Ensure the tie is under the 1/2-inch tubular nylon webbing ties.

(9) Tie a length of type III nylon cord to the left point indicated in the specific rigging chapter. Tie the other end of the type III nylon cord to the body of the top guillotine knife. The length of the cord is given in the specific chapter for the item being rigged. S-fold the slack in the type III nylon cord and secure with masking tape.

(10) Repeat step 9 using the right point indicated in the specific rigging chapter and the bottom guillotine knife.

Figure 3-36. Mast Safety Tied (continued)

SECTION VIII - LOAD MARKING AND INSPECTION

MARKING RIGGED LOAD

3-26. Each rigged load must have a data tag prepared for it, and some rigged loads may require a Shipper's Declaration for Dangerous Goods. The center of balance must also be clearly marked on both sides of the platform.

a. Data Tag. A data tag is prepared and secured on the rear of each platform load. Entries on the tag are used by the Army and Air Force in making inspections and in finding causes for malfunctions. The entries are also used to help the loadmaster determine where to place the load in the aircraft. Use a ballpoint pen or other waterproof marking device to record the following information on the tag:

(1) Total rigged weight.

(2) Height, including parachutes.

(3) Width.

(4) Overall length.

(5) Overhang (specify front, rear, or side of load).

(6) Longitudinal center of balance (measured from the front edge of the platform).

b. Shipper's Declaration for Dangerous Goods. This form is prepared and secured on each load that has any type of hazardous material such as fuel, ammunition, or a battery.

c. Center of Balance. In addition to being included on the data tag, the longitudinal center of balance must also be marked on the platform. The vertical line of the symbol CB is placed at the center of balance on both sides of the platform.

TYPES OF INSPECTIONS

3-27. The types of inspections performed on a rigged load are the final rigger inspection, the before-loading inspection, and the after-loading inspection. All rigged DRAS loads must be inspected at prescribed intervals to make sure that the loads and the equipment used on the loads are assembled and installed to meet the criteria outlined in the specific rigging chapter.

a. ***Final Rigger Inspection (Shop Final).*** After the load has been completely rigged, a certified Transported Force Rigger Inspector performs the final rigger inspection. This inspection is accomplished before the rigged load leaves the rigging site to make sure it is rigged according to the specific chapter for that particular load. This inspection should be conducted by an inspector other than the rigger supervising the installation of parachutes and deployment system. It is not necessary to use the DD Form 1748-series inspection forms for this inspection.

b. ***Before-Loading Inspection.*** A before-loading inspection must be performed on a rigged load before it is loaded into the aircraft. This inspection is conducted jointly by a certified Transported Force Rigger Inspector and a certified Air Force Joint Airdrop Inspector. The inspec tors use the proper joint airdrop inspection record, and both sign the appropriate blocks to certify correct rigging of the load. When the rigged load is delivered to the aircraft, the aircraft loadmaster checks the inspection form for completion and necessary signatures before accepting the load.

c. ***After-Loading Inspection.*** After the loadmaster completes the loading and in-aircraft rigging, the after-loading inspection is performed. This inspection is conducted jointly by a certified Transported Force Rigger Inspector, a certified Air Force Joint Airdrop Inspector, and the aircrew loadmaster. After the inspection is completed, the three inspectors certify, by signing the form, that the load is ready to airdrop.

CHAPTER 4

RIGGING DUAL ROW AIRDROP SYSTEM (DRAS) M998 / M1038/ M1097 CARGO/ TROOP CARRIER HMMWV

DESCRIPTION OF LOAD

4-1. The HMMWV truck is rigged on a DRAS platform for DRAS airdrop. An accompanying load weighing a minimum of 800 pounds and a maximum of 2,000 pounds must be rigged in the truck. The load is rigged with three G-11D cargo parachutes.

a. The M998 Cargo/Troop Carrier (Figure 4-1). It weighs 5,200 pounds. It is 180 inches long and 85 inches wide. The reduced height of the vehicle is 54 inches.

b. The M998A1 Cargo/Troop Carrier. It weighs 5,380 pounds. It is 180 inches long and 86 inches wide. The reduced height of the vehicle is 56 inches.

c. The M1038 with winch Cargo/ Troop Carrier. It weighs 5,327 pounds. It is 180 inches long and 86 inches wide. The reduced height of the vehicle is 54 inches.

d. The M1038A1 with winch Cargo/Troop Carrier. It weighs 5,507 pounds. It is 186 inches long and 86 inches wide. The reduced height of the vehicle is 56 inches.

e. The M1097 Cargo/Troop Carrier. It weighs 5,600 pounds. It is 180 inches long and 85 inches wide. The reduced height of the vehicle is 54 inches.

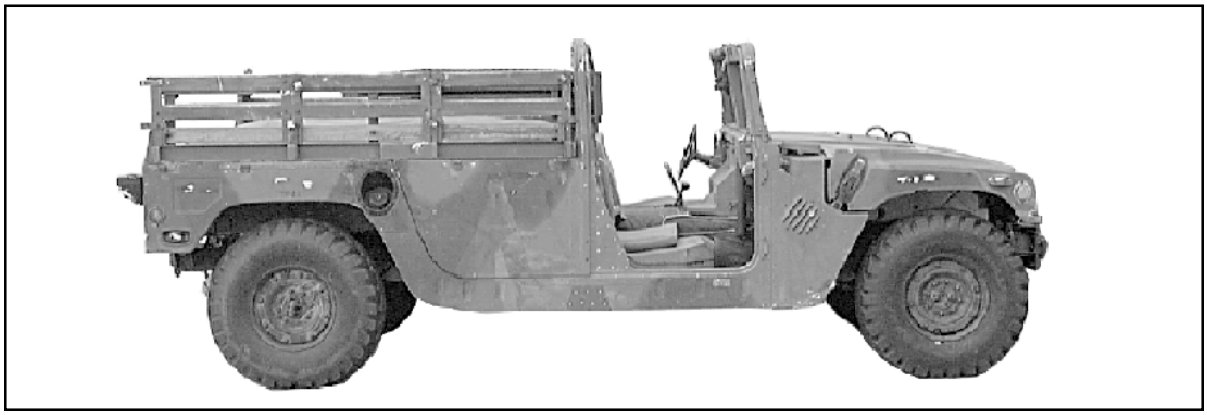

Figure 4-1. M998/ M1038/ M1097 Cargo/ Troop Carrier HMMWV

PREPARING PLATFORM

4-2. Inspect, or assemble and inspect, a DRAS platform with outrigger assemblies and outrigger platform support weldments and link assemblies according to TM 10-1670-268-20&P/TO 13C7-52-22 and as shown in Figure 4-2.

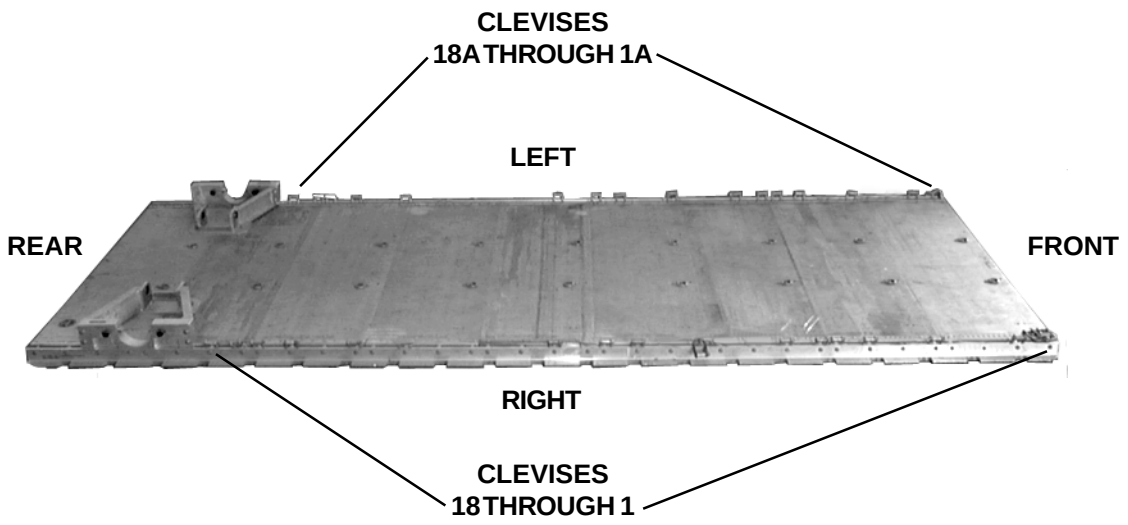

Step:

1. Starting at the front of each platform side rail, install clevises on the bushings bolted on holes 1 (triple), 2, 5, 7, 9, 10, 13 (double-invert bottom clevis on right side of platform), 15, 16, 18, 25, 27, 28, 29, and 30.
2. Starting at the front of the platform, number the clevises 1 through 18 on the right side and 1A through 18A on the left side.
3. Label the tie-down rings according to Figure 3-1.

   NOTE: The clevis attached to the 13th bushing is clevis number 10 and the doubled clevis is number 11.

Figure 4-2. Platform Prepared

BUILDING AND PLACING HONEYCOMB STACK

4-3. Prepare the honeycomb stacks for the trucks as shown in Figure 4-3. Position the honeycomb stacks as shown in Figure 4-4.

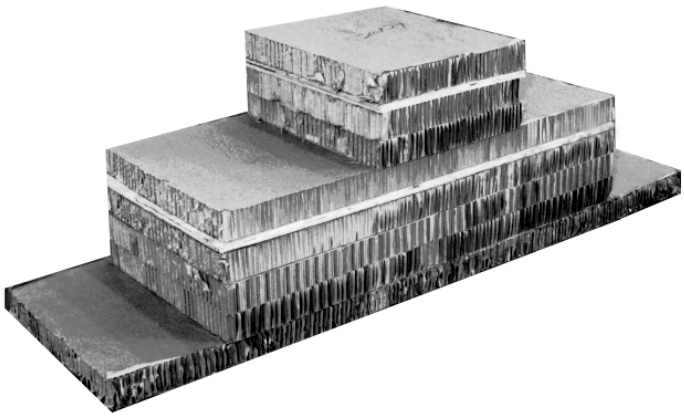

Stack Number	Pieces	Width (inches)	Length (inches)	Material	Instructions
1 and 3	1	24	80	Honeycomb	This is the base.
	3	24	54	Honeycomb	Center and glue together and glue to base.
	1	24	54	3/4-inch Plywood	Center and glue to top of 24-inch by 54-inch honeycomb.
	1	24	54	Honeycomb	Center and glue to top of 24-inch by 54-inch plywood.
	2	24	20	Honeycomb	Center and glue to top of 24-inch by 54-inch honeycomb.
	1	24	20	3/4-inch Plywood	Center and glue to top of 24-inch by 20-inch honeycomb.
	1	24	20	Honeycomb	Center and glue to top of 24-inch by 20-inch plywood.

Figure 4-3. Honeycomb Stacks Prepared

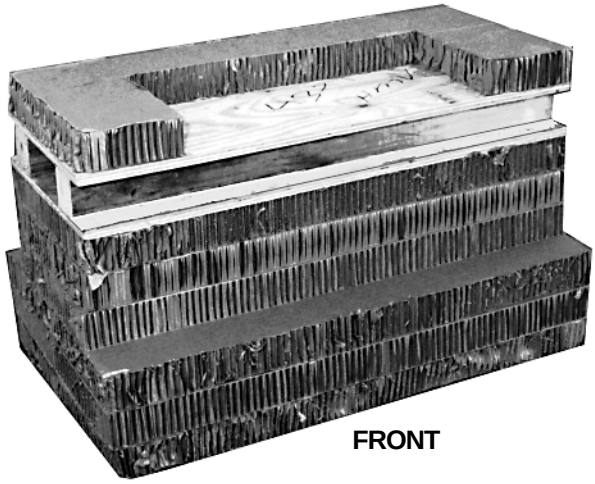

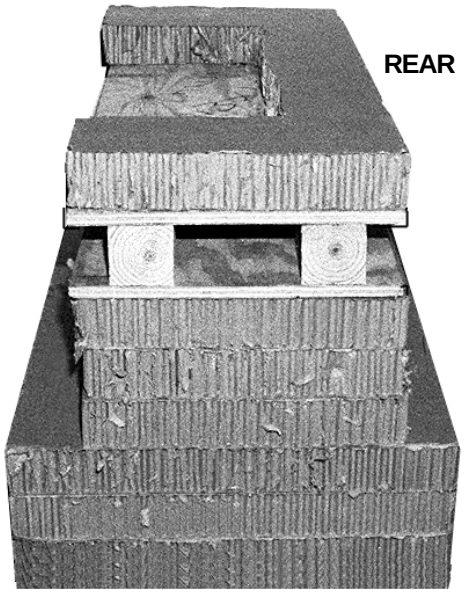

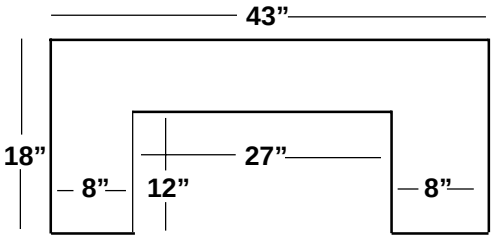

NOTE: Drawing is not to scale.
All dimensions are given in inches.

Stack Number	Pieces	Width (inches)	Length (inches)	Material	Instructions
2	3	26	43	Honeycomb	Glue together to form base.
	3	18	43	Honeycomb	Center and glue to top of base.
	1	18	43	3/4-inch Plywood	Use in next step.
	2	4X4	43	Lumber	Nail one piece to the 18-inch by 43-inch by 3/4-inch plywood, 1 1/2-inches from the 43-inch edge.
	1	18	43	3/4-inch Plywood	Nail on top of the 4X4 lumber and glue to the 18-inch by 43-inch honeycomb.
	1	18	43	Honeycomb	Cut out an 18-inch by 27-inch section centered on the honeycomb and glue to the 18-inch by 43-inch by 3/4-inch plywood (Shown above).

Figure 4-3. Honeycomb Stacks Prepared (Continued)

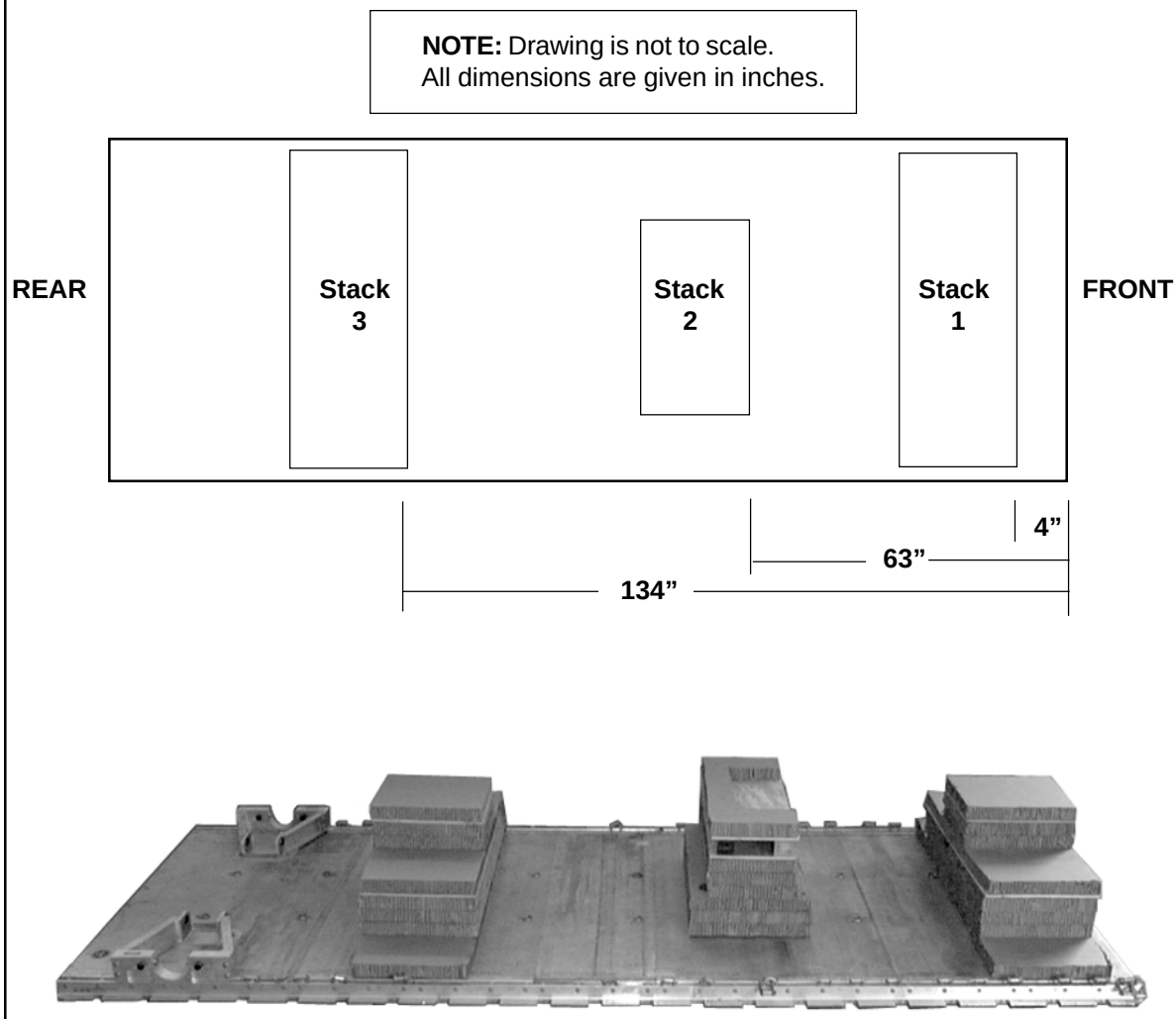

Stack Number	Position of Stack on Platform
	Place stack:
1	4 inches from front edge of platform and centered.
2	63 inches from the front edge of the platform and centered.
3	134 inches from the front edge of the platform and centered.

Figure 4-4. Honeycomb Positioned

INSTALLING OPTIONAL DRIVE- OFF AID ON PLATFORM

4-4. Install the drive-off aid as shown in Chapter 3, Figure 3-5.

PREPARING TRUCK

4-5. Prepare the truck as described below.

a. Make sure the fuel tank is no more than 75% full. Prepare the fuel tank filler cap and fuel filler opening as shown in Figure 4-5. Prepare the fuel tank drain plug as shown in Figure 4-6.

NOTE: Certain units may be authorized a waiver allowing 95% fuel. One way to verify the tank is 95% full is to fill the tank and withdraw 1 1/4 gallons with a hand pump.

CAUTION
A full tank does not allow for expansion, and is a danger to aircraft and air crew.

b. Make sure the batteries and battery compartment comply with AFJMAN 24-204/TM 38-250.

c. Prepare the cab of the truck as shown in Figure 4-7.

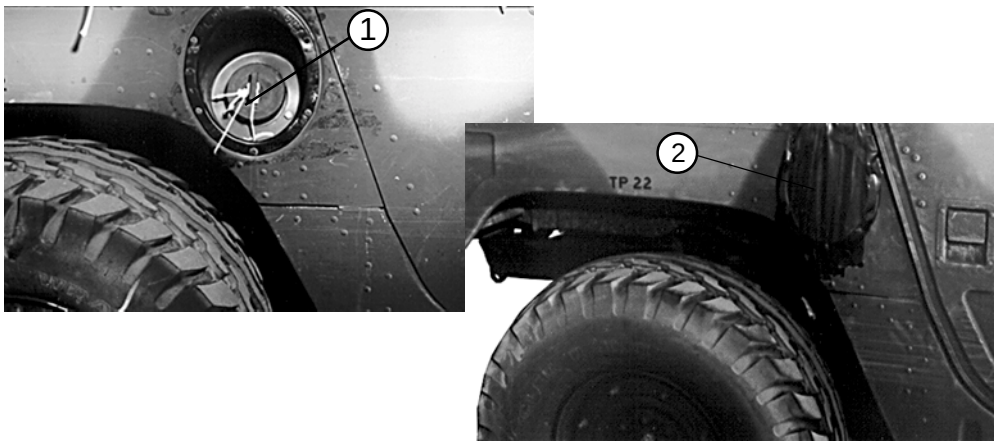

(1) Tie the fuel filler cap to the body of the truck with type III nylon cord.

(2) Tape the fuel filler opening.

Figure 4-5. Fuel Tank Filler Cap and Opening Prepared

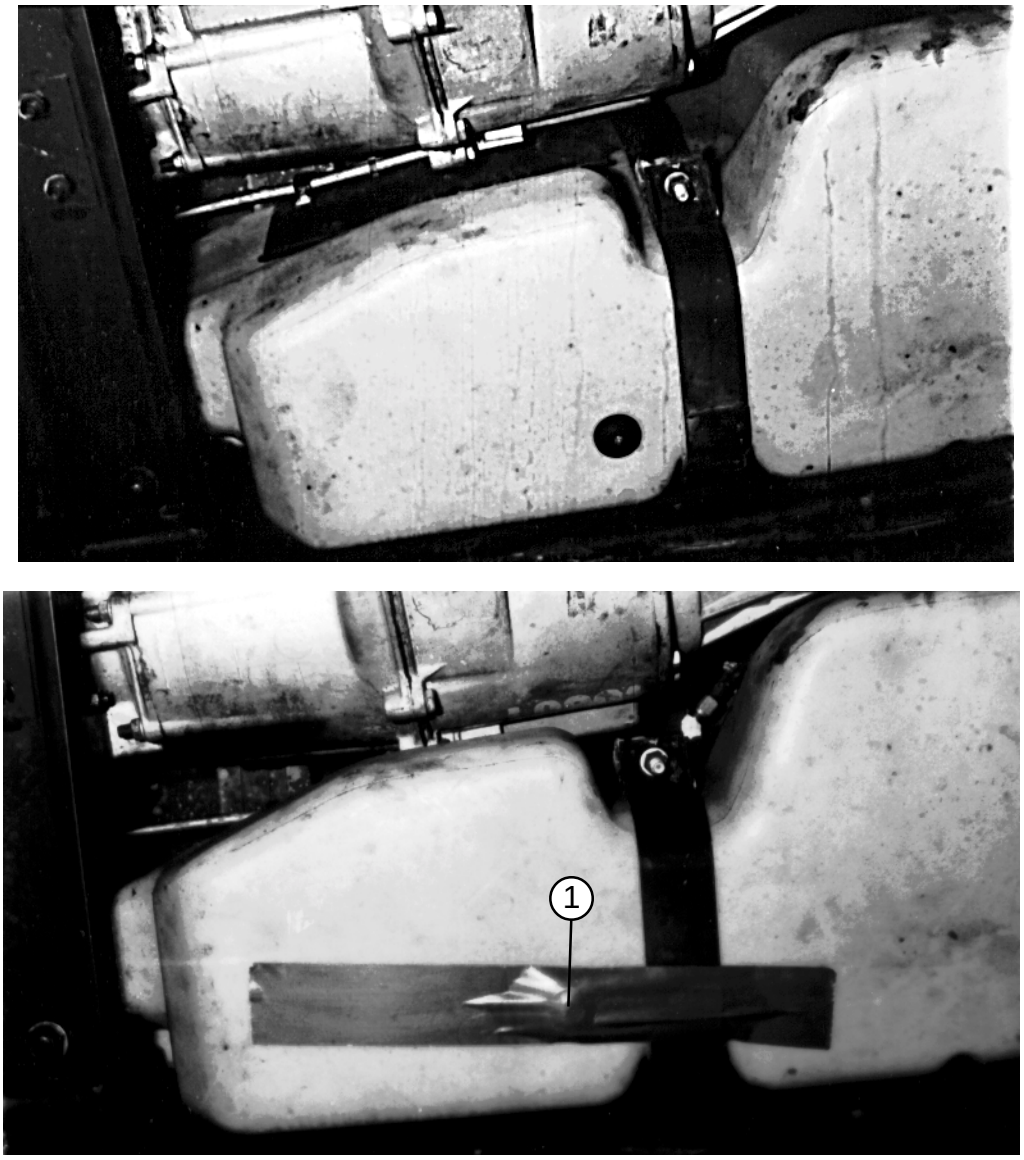

(1) Place a 12-inch length of cloth-backed tape over the fuel tank drain plug.

Figure 4-6. Fuel Tank Drain Plug Prepared

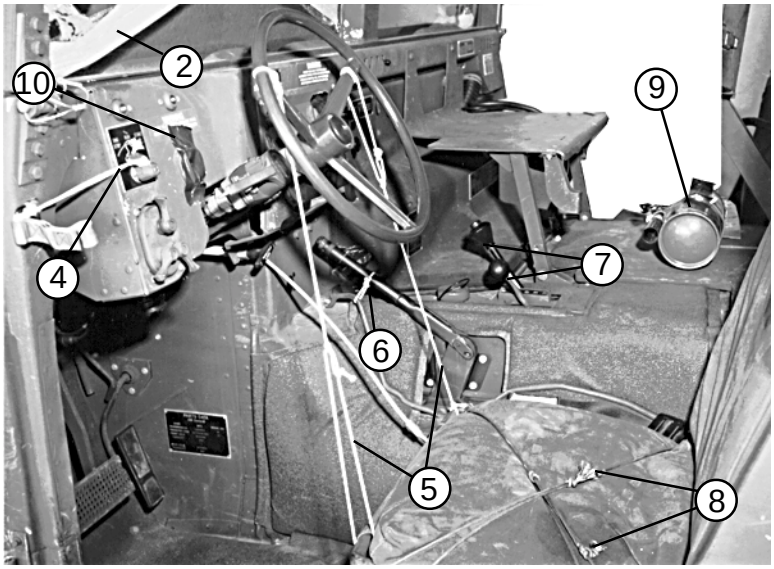

1. Remove all doors, covers, and supporting bows (not shown).
2. Tape the windshield glass on both sides in an X.
3. Remove and pad the mirrors. Secure them under the driver's seat with type III nylon cord (not shown).
4. Tie the engine start switch in the engine stop position with type I, 1/4-inch cotton webbing.
5. Tie the steering wheel to the seat frame in two places with type III nylon cord, or use the retractable steering wheel locking cable. If the locking cable is used, secure it to the steering wheel with type III nylon cord, not a padlock.
6. Tie the emergency brake handle in the off position with type III nylon cord.
7. Place the transmission and four-wheel drive levers in the neutral position.
8. Tie the seat cushions to the seat frames with type III nylon cord. Fold the passenger seats in four-door trucks and secure them with the pins provided.
9. Tie the fire extinguisher in place in it's designed rack with two lengths of type III nylon cord.
10. Tape all instrument panel gauges.

Figure 4-7. Cab Prepared

d. Secure and pad radio equipment in the cab section as shown in Figure 4-8.

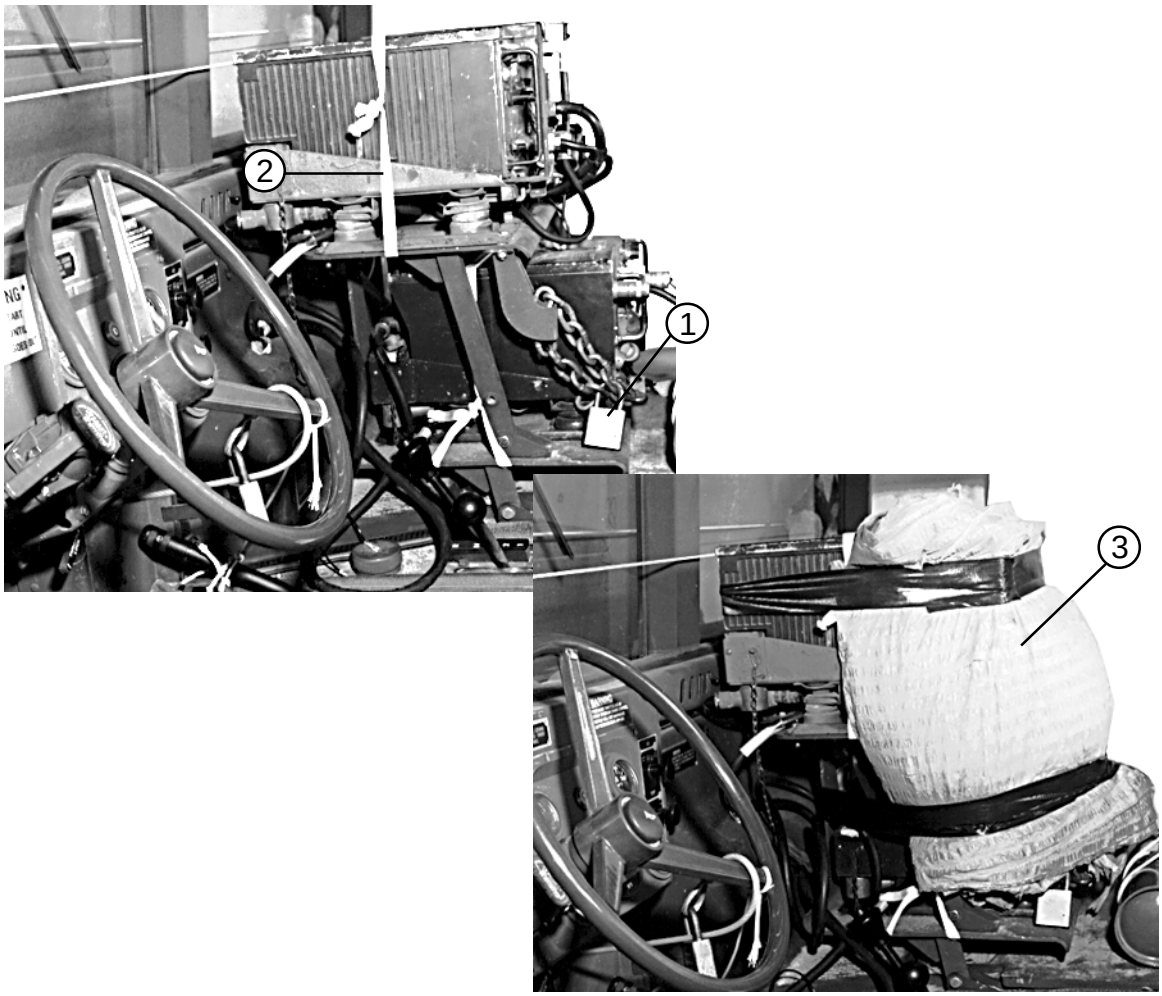

(1) Secure communications equipment in its mount with chains and padlocks.

(2) Tie the equipment to its mount with 1-inch tubular nylon webbing.

(3) Pad the front of the equipment generously with cellulose wadding taped in place. Pad the radio handset with cellulose wadding and tie the handset to the mount with type III nylon cord.

(4) Remove antennas and stow with the doors. Pad the antenna mounts with cellulose wadding taped in place (not shown).

Figure 4-8. Communications Equipment Secured and Padded

e. Prepare the front of soft-top trucks with foldable windshields as shown in Figure 4-9.

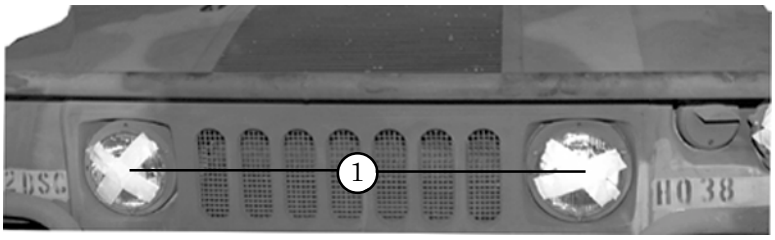

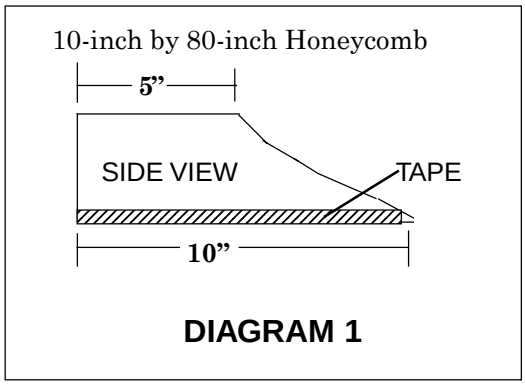

(1) Tape all lights and reflectors.

(2) Cut a 10-inch by 80-inch piece of honeycomb. Taper crush 5 inches the length of the honeycomb. Tape the 10-inch width of the honeycomb (See diagram 1). Place the honeycomb flush on the front end of the hood with the taper up and to the rear of the vehicle. Cut an 18-inch by 80-inch piece of honeycomb. Position on top of and flush with the front of the 10-inch by 80-inch piece of honeycomb. Tie the two pieces of honeycomb together with type III nylon cord around the 80 inch length. Tape top piece of honeycomb where the type III nylon cord will come in contact.

Figure 4-9. Front of Truck Prepared

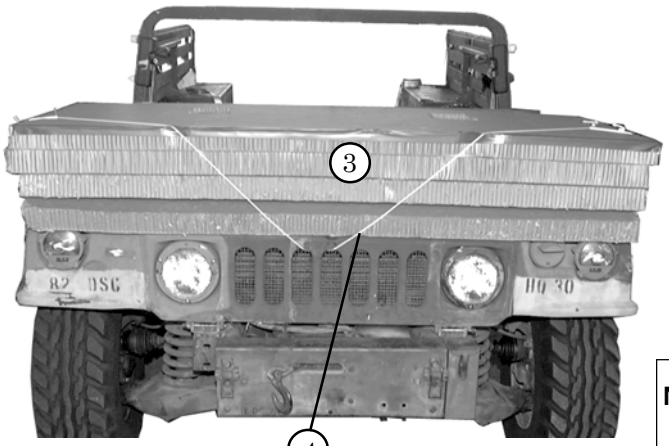

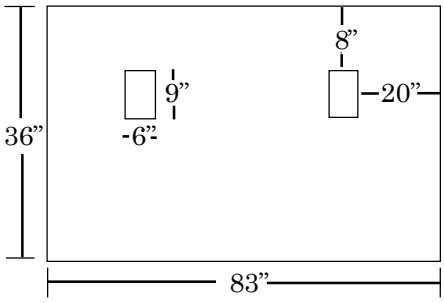

NOTE: Drawing is not to scale.
All dimensions are given in inches.

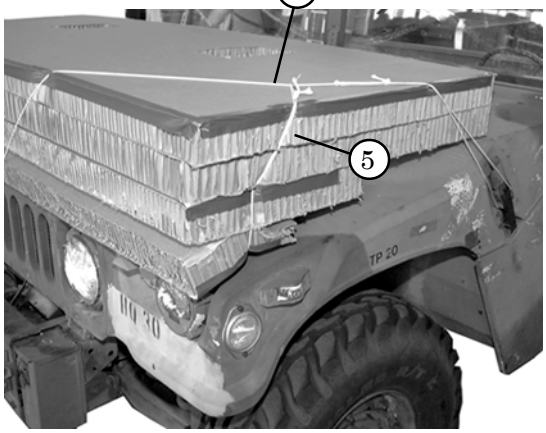

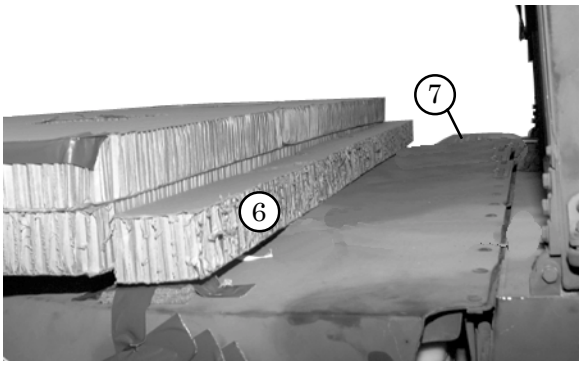

(3) Place two 36-inch by 83-inch pieces of honeycomb, with cutouts as shown, on top of the previously positioned honeycomb and flush with the front. Tape the 36 inch sides and front edge on the top piece of honeycomb.

(4) Secure the 36-inch by 83-inch honeycomb pieces with a length of type III nylon cord. Tie the type III nylon cord to the left hood latch over the honeycomb, through the center of the grill, over the right side of the honeycomb and tie to the right hood latch.

(5) Run a length of type III nylon cord through the securing tie on the bottom two layers of honeycomb and through the securing tie on the top two layers of honeycomb on each side of the load.

(6) Cut a 4-inch by 80-inch length of honeycomb. Position the honeycomb behind the installed honeycomb. Mark and crush an area for the windshield wipers.

(7) Cover the breather cap with one layer of felt and tape in place with cloth-backed tape.

Figure 4-9. Front of Truck Prepared (Continued)

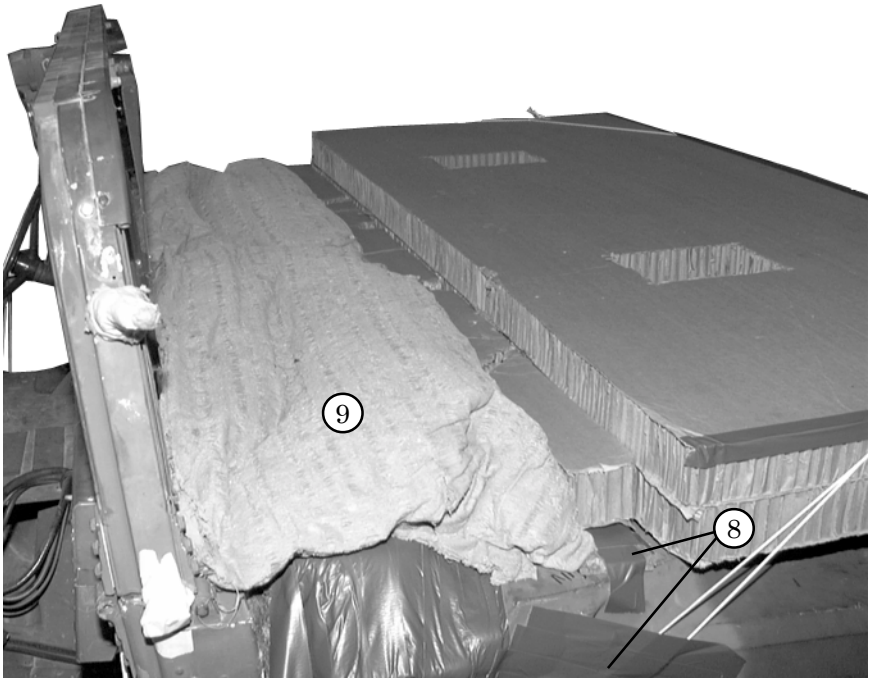

(8) Cut four 4-inch by 4-inch by 1/2-inch pieces of felt. Position two pieces of felt under each end of the 4-inch by 80-inch honeycomb. Pad and tape the hood latches and tape the 4-inch by 4-inch pieces of felt in position.

(9) Fill the void between the 4-inch by 80-inch honeycomb and the windshield with cellulose wadding. Ensure the entire void is filled to prevent the windshield from breaking.

Figure 4-9. Front of Truck Prepared (Continued)

NOTE: Drawing not to scale.
All dimensions are given in inches.

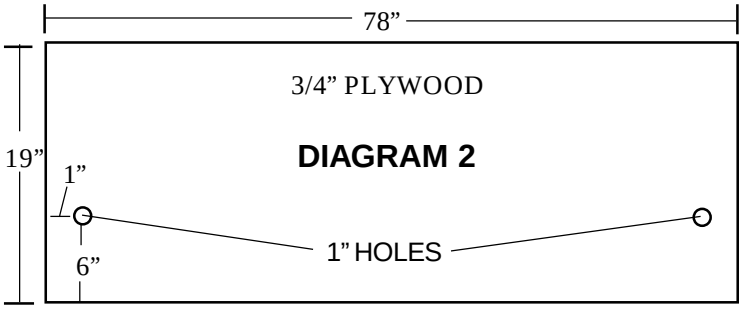

Cut a 19-inch by 78-inch by 3/4-inch piece of plywood and drill holes as shown in diagram 2.

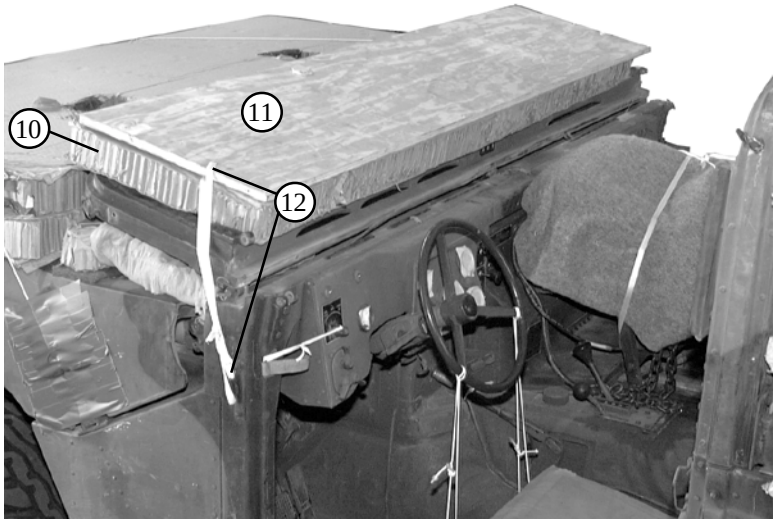

(10) Lay the windshield down. Cut a 19-inch by 78-inch piece of honeycomb to protect the windshield. Cut out an opening for the windshield wiper motor. Position honeycomb on top of the windshield.

(11) Position the 19-inch by 78-inch by 3/4-inch piece of plywood, as shown in diagram 2, on top of the 19-inch by 78-inch honeycomb with the holes toward the rear of the vehicle.

(12) Secure a length of 1/2-inch tubular nylon through the 1/2-inch hole in the plywood and through the top door hinge bracket on each side of the load.

Figure 4-9. Front of Truck Prepared (Continued)

⑬ SOFT TOP HMMWV FRONT ATTITUDE CONTROL SYSTEM

NOTE: Drawings not to scale.
All dimensions are given in inches.

DIAGRAM 3

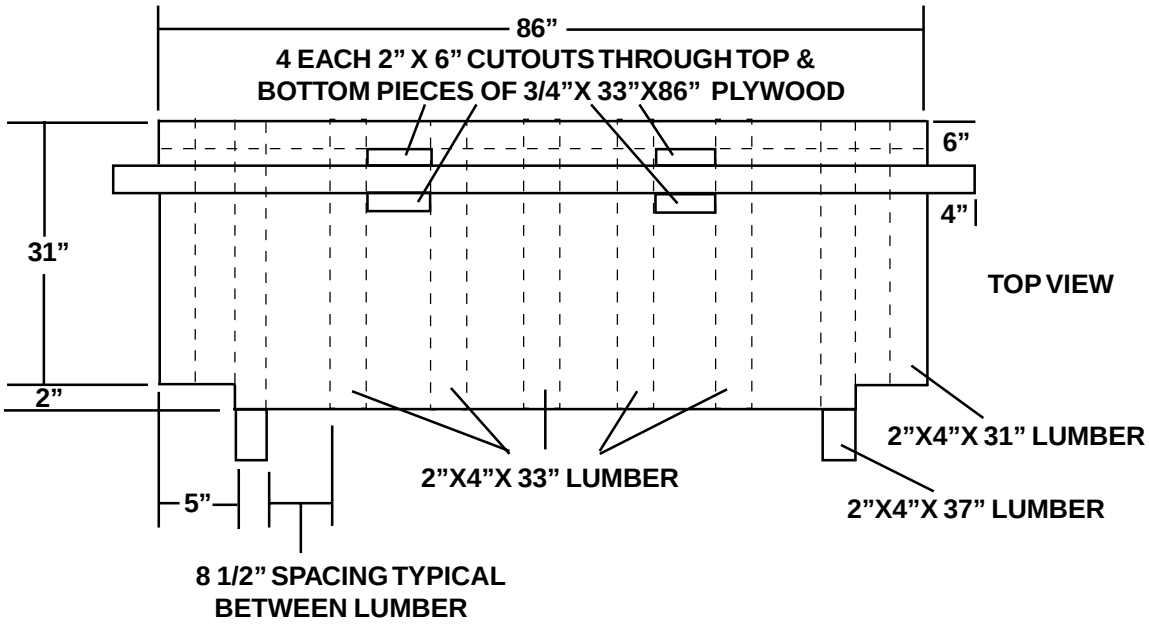

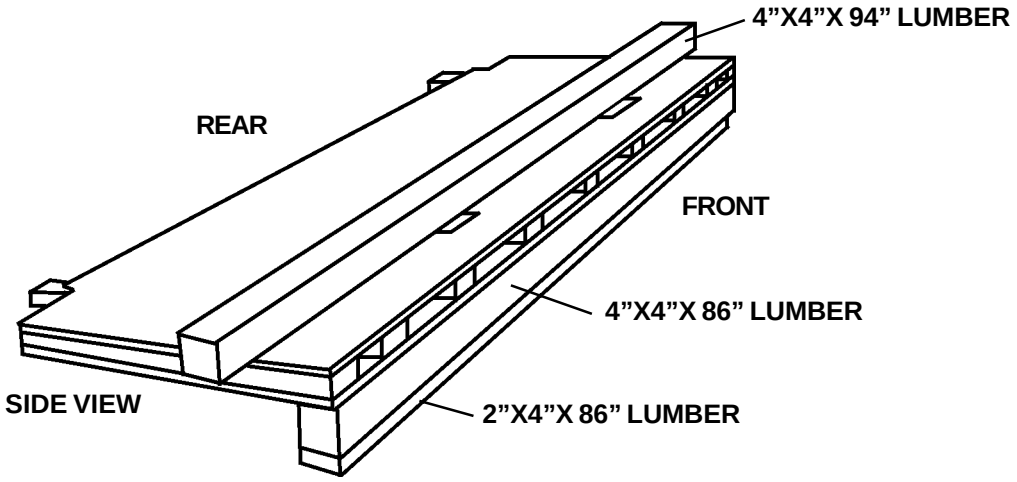

Figure 4-9. Front of Truck Prepared (Continued)

(13) Build the soft top HMMWV front attitude control system (ACS) as described below and as shown in diagram 3 on previous page.

a. Make four 2-inch by 6-inch cutouts through the top and bottom of the plywood sheets 21 3/4-inches in from the edge of the plywood as shown in diagram 3.

b. Nail two pieces of plywood with the 2x4's between them as shown in diagram 3 using 8d nails every 6 inches.

c. Nail one 4x4x94-inch piece of lumber on top of the plywood sandwich, centered and 6-inches from the front edge using 40d nails every 10 inches.

d. Nail one 4x4x86-inch piece of lumber on the bottom front edge of the plywood sandwich using 40d nails every 10 inches.

e. Nail one 2x4x86-inch piece of lumber to the bottom of the 4x4x86 piece of lumber previously installed using 10d nails every 10 inches.

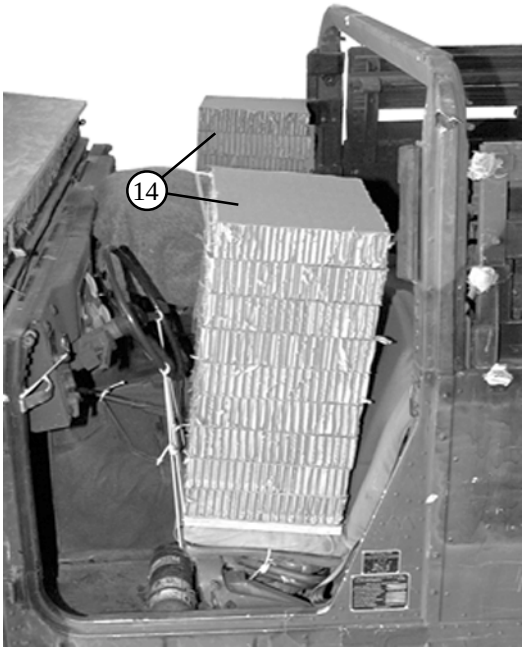

(14) Build two honeycomb stacks using nine 14-inch by 20-inch sheets of honeycomb glued together with a 3/4-inch by 14-inch by 20-inch piece of plywood glued to the bottom. Place one on each seat with the plywood to the bottom.

Figure 4-9. Front of Truck Prepared (Continued)

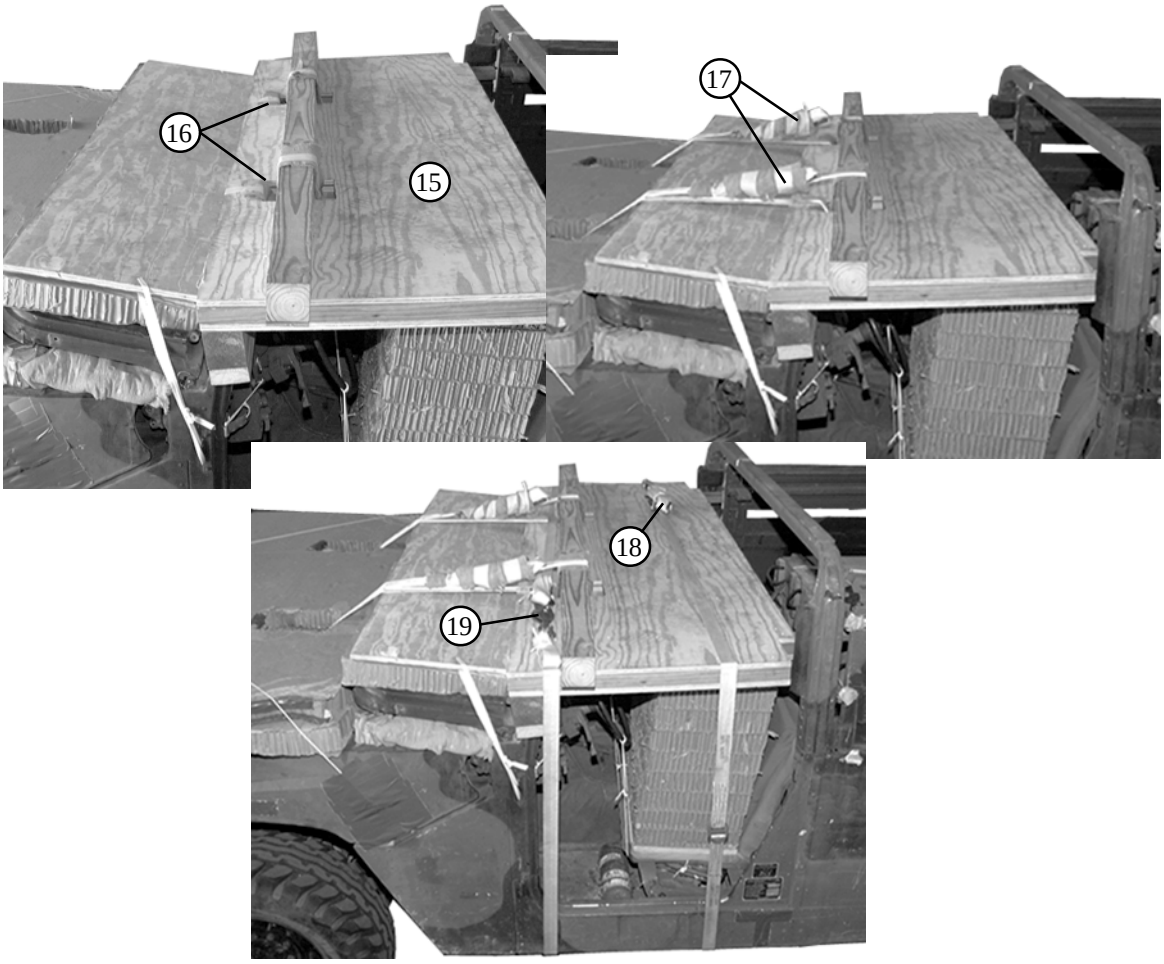

(15) Position front ACS on the honeycomb stacks with the 2x4 lumber resting on the dash and flush against the windshield.

(16) Pad sharp edges around the 4x4 lumber at the cutouts and the front edges of the cutouts, where the slings will come in contact, with felt and tape to secure.

(17) Route a lashing from the front left lifting shackle down through the front left cutout and up through the rear left cutout over the 4x4 lumber and load bind in front of the 4x4 lumber. Pad and tape load binder with felt. Repeat for right side.

(18) Route a 30-foot lashing over the ACS board 6 inches forward of the rear of the plywood edge, down and around frame of vehicle and up to top of ACS board. Position the load binder on top right side of ACS board.

(19) Route a second 30-foot lashing over the front ACS board in front of the 4x4 lumber down and around the frame of vehicle and up to top of ACS board. Position the load binder on top left side of ACS board.

Figure 4-9. Front of Truck Prepared (Continued)

f. Prepare and secure the pioneer tool kit according to TM 9-2320-280-10/ TO 36A12-1A-2091-1/ TM 2320-10/6 and as shown in Figure 4-10.

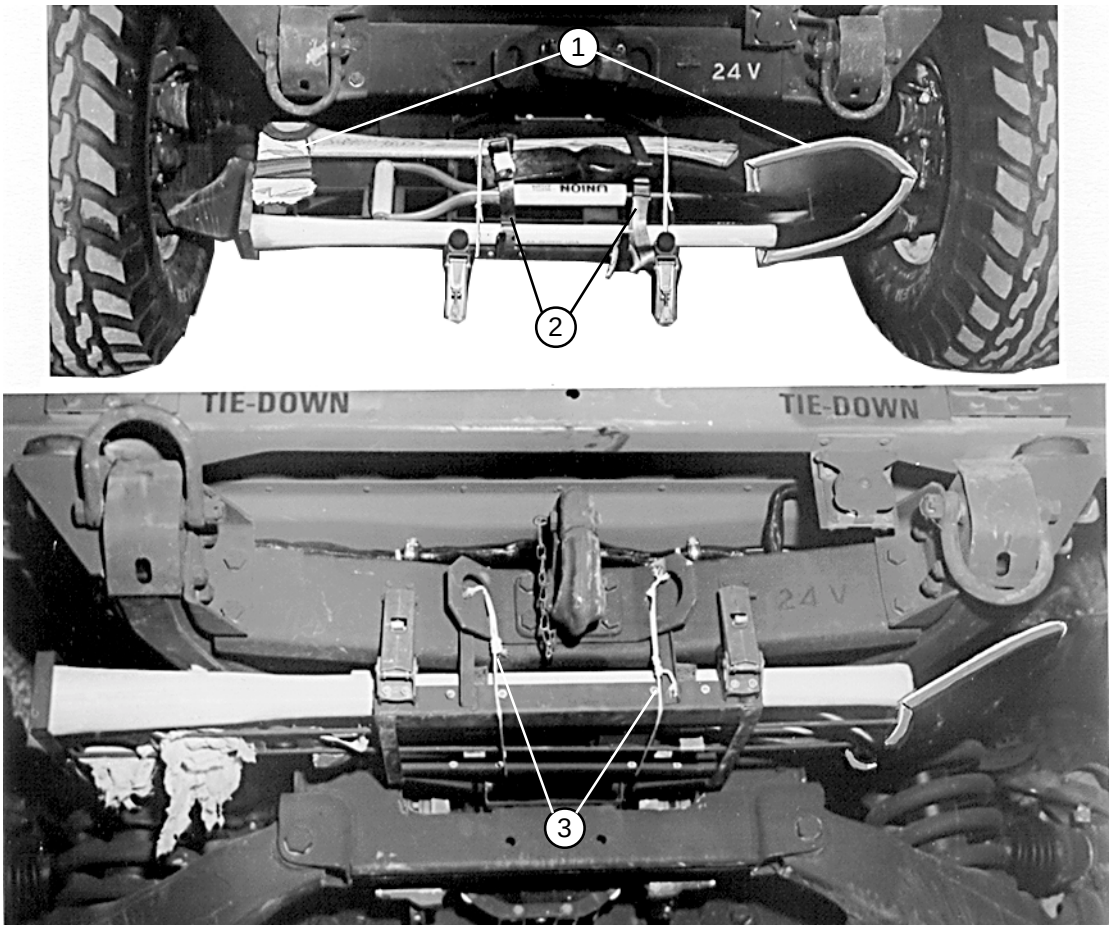

1. Tape all sharp edges of the pioneer tools. Pad the ax head with cellulose wadding and tape.
2. Place the tools in the rack, and secure them with the straps provided and type III nylon cord.
3. Close and latch the tool rack. Tie the rack in place with type III nylon cord.

Figure 4-10. Pioneer Tool Kit Secured

g. Prepare the underside of the truck as shown in Figure 4-11.

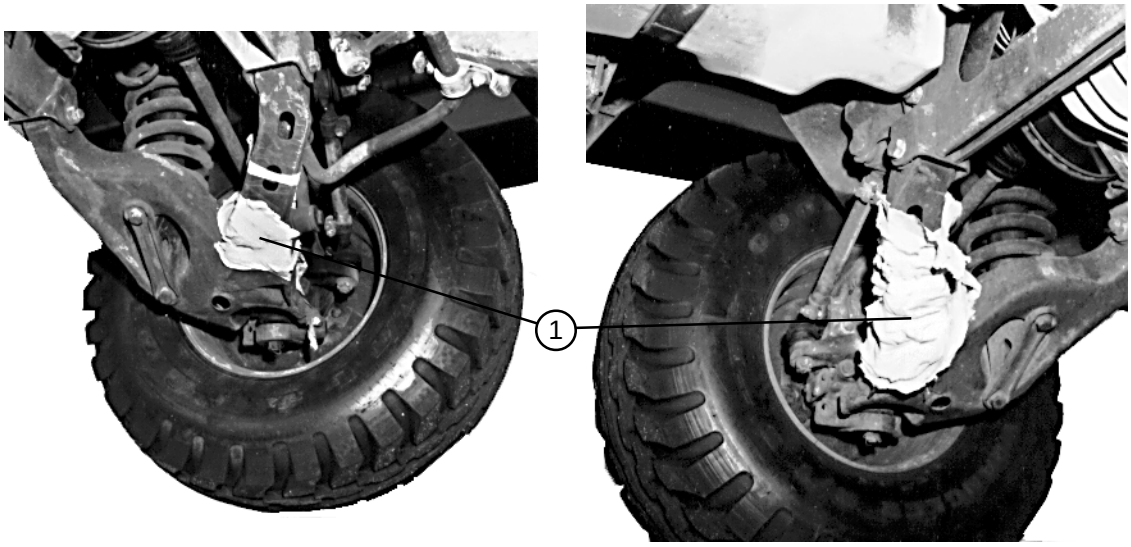

(1) Pad the lower control arms on the front and rear of the truck with cellulose wadding and tape in place.

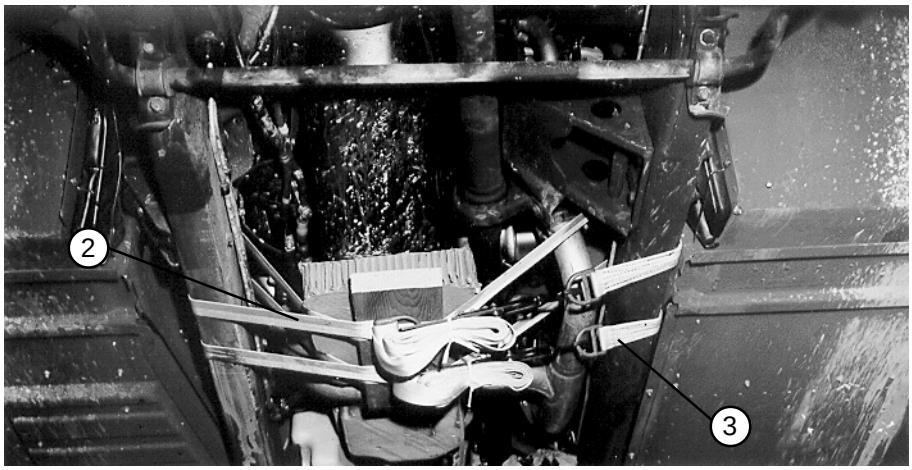

(2) Pass a 15-foot lashing over the right frame rail, under the oil pan, and over the left frame rail. Make sure the lashing goes over the exhaust pipe and then under it. Make sure the wires running along the frame rail are to the outside of the lashing. Place a 12-inch by 12-inch piece of honeycomb and a 2- by 6- by 16-inch piece of lumber between the lashing and the oil pan. Secure the lashing with a load binder and D-ring.

(3) Install another lashing just to the rear of the lashing installed in step 2 above. Route the lashing in the same way.

Figure 4-11. Under Side of Truck Prepared

STOWING ACCOMPANYING LOAD

4-6. Use the procedures shown in Figure 4-12 to stow 16 boxes of 105 mm ammunition and truck equipment.

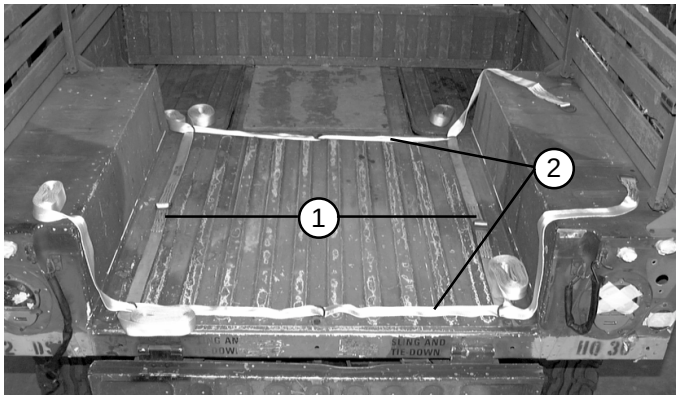

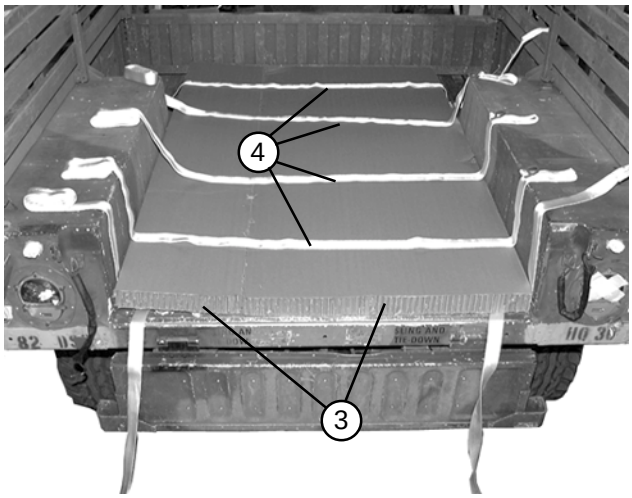

1. Lay two 30-foot lashings lengthwise across the cargo bed, passing them through the left and right tie-down rings in the cargo floor.
2. Lay two 15-foot lashings widthwise across the cargo bed passing through the center and rear tie-down rings in the cargo floor.
3. Cover the cargo floor using two pieces of honeycomb to make a 52-inch by 80-inch layer. Position the rear of the layer 1 1/2 inches from the rear of the cargo bed.
4. Space four 15-foot lashings evenly across the width of the cargo bed.

Figure 4-12. Stowing Ammunition and Truck Equipment

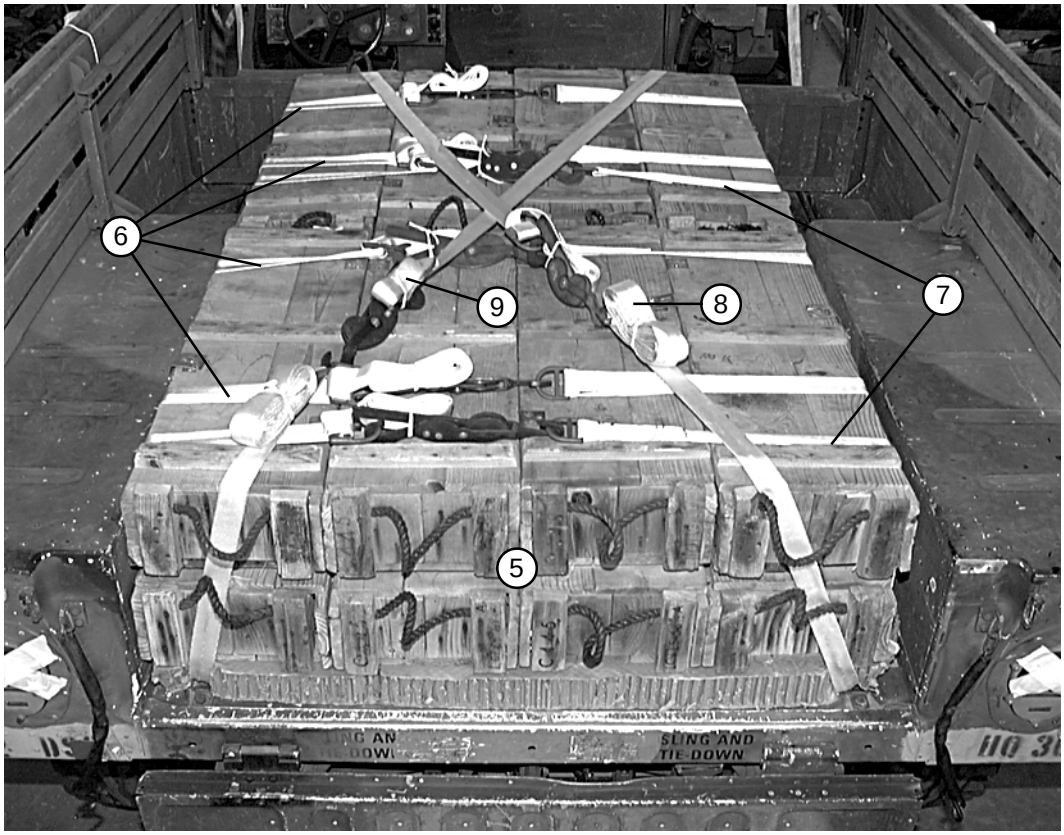

(5) Position 16 boxes of 105 mm ammunition on the honeycomb in two layers of eight boxes.

(6) Bind the boxes together with the four side-to-side lashings placed in step 4.

(7) Secure the lashings placed in step 2.

(8) Join the left front and right rear 30-foot lashing placed in step 1 with two D-rings and load binder.

(9) Join the left rear and right front 30-foot lashing placed in step 1 in the same way as in step 8.

Figure 4-12. Stowing Ammunition and Truck Equipment (Continued)

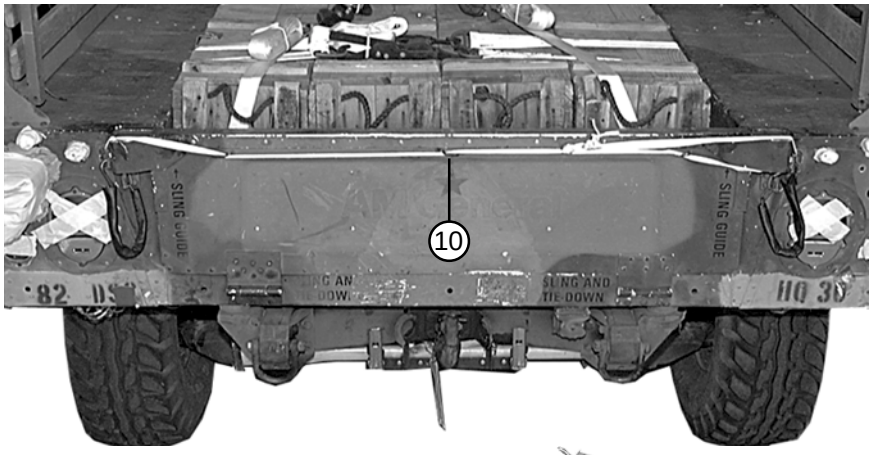

(10) Close the tailgate. Secure it to the chain hook brackets with a double length of 1/2-inch tubular nylon.

(11) Wrap the truck tarpaulin bows in cellulose wadding and tape the wadding in place. Position the bows with the legs on the outside of the sideboards on the front of the cargo bed. Secure the bows to the top crew compartment cross-member with type III nylon cord.

Figure 4-12. Stowing Ammunition and Truck Equipment (Continued)

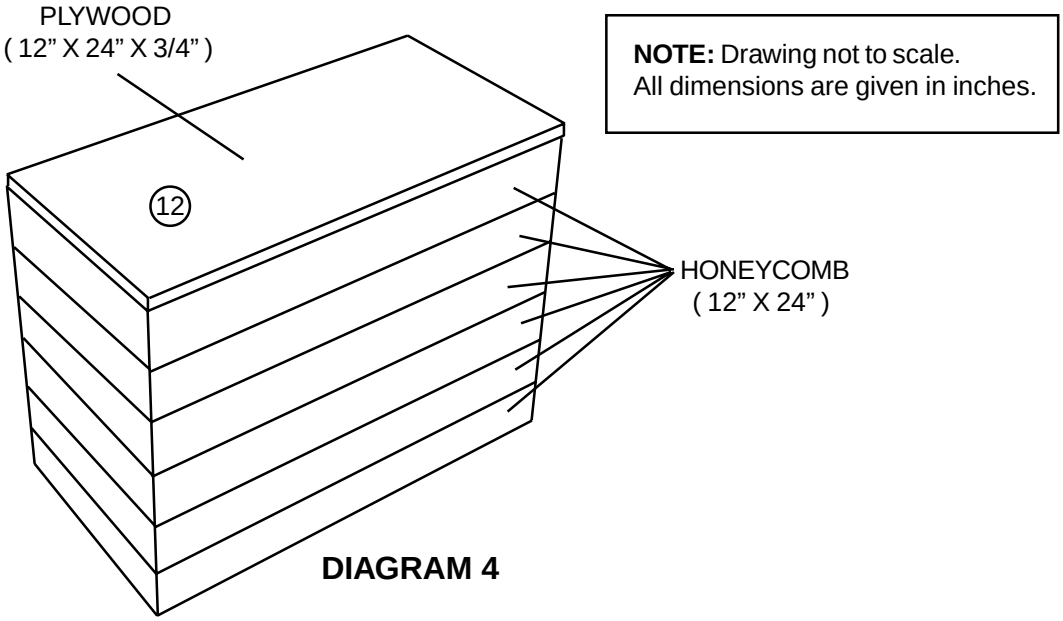

NOTE: Drawing not to scale.
All dimensions are given in inches.

DIAGRAM 4

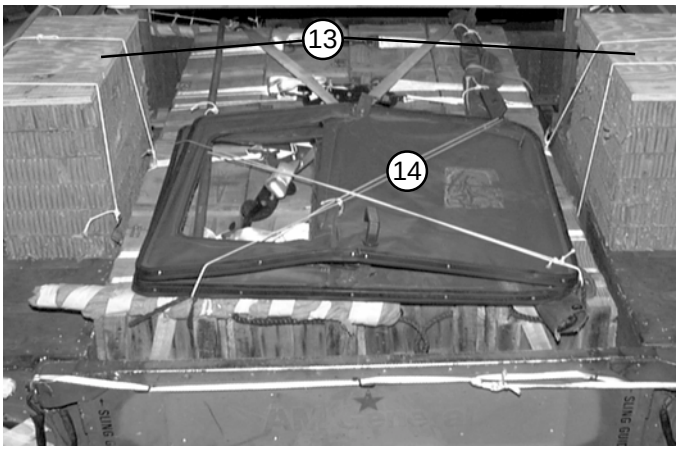

(12) Cut twelve 12-inch by 24-inch pieces of honeycomb. Form two rear ACS support stacks by gluing six layers of 12-inch by 24-inch honeycomb. Cut two 12-inch by 24-inch by 3/4-inch pieces of plywood and glue one piece on top of each stack as shown in diagram 4 above.

(13) Position the rear ACS support stacks on the front edge of the rear wheel wells. Secure the support stacks with two lengths of type III nylon cord to a convenient point on the load.

(14) Wrap the cross pieces of the center beam support with cellulose wadding and tape padding in place. Place the center support beam, doors, and cargo covers in the cargo bed and secure with type III nylon cord to convenient points on the load.

Figure 4-12. Stowing Ammunition and Truck Equipment (Continued)

LIFTING AND POSITIONING TRUCK AND INSTALLING OPTIONAL DRIVE-OFF AIDS

4-7. Install the lift slings and position the truck on the honeycomb stacks as shown in Figure 4-13. Attach the optional drive-off aids to the wheels of the truck as shown in Chapter 3.

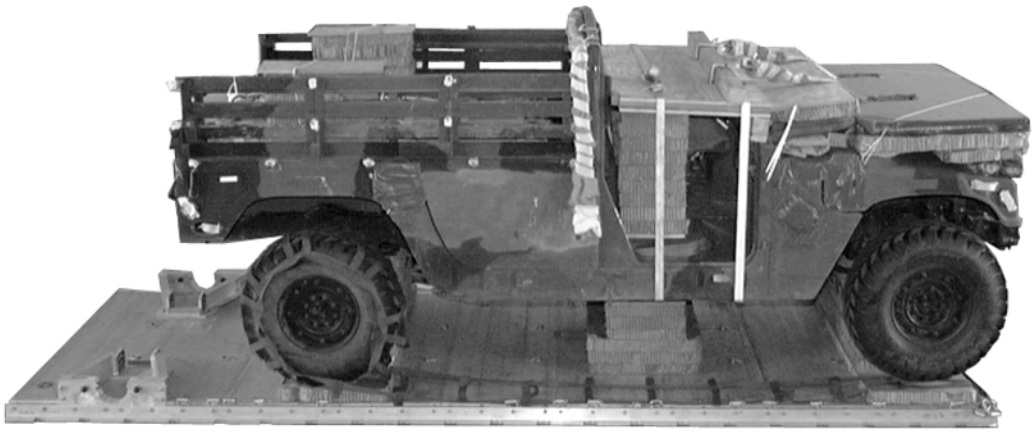

1. Attach a 9-foot (2-loop) type XXVI nylon sling to each airlift bracket on the hood of the truck with a medium clevis (not shown).
2. Attach a 12-foot (2-loop) type XXVI nylon sling to each rear lifting shackle with a medium clevis. Route the slings through the sling guides on each side of the tailgate (not shown).
3. Position the truck with the front cross member on the front edge of stack 1. Ensure the center frame cross member rests squarely on the 6 inch part of honeycomb on stack 2.
4. Install the drive-off aids on the rear wheels before completely lowering the rear of the truck.
5. Remove the lift kit (not shown).

Figure 4-13. Truck Positioned

LASHING TRUCK

4-8. Lash the truck to the platform according to Chapter 3 and as shown in Figures 4-14 through 4-17.

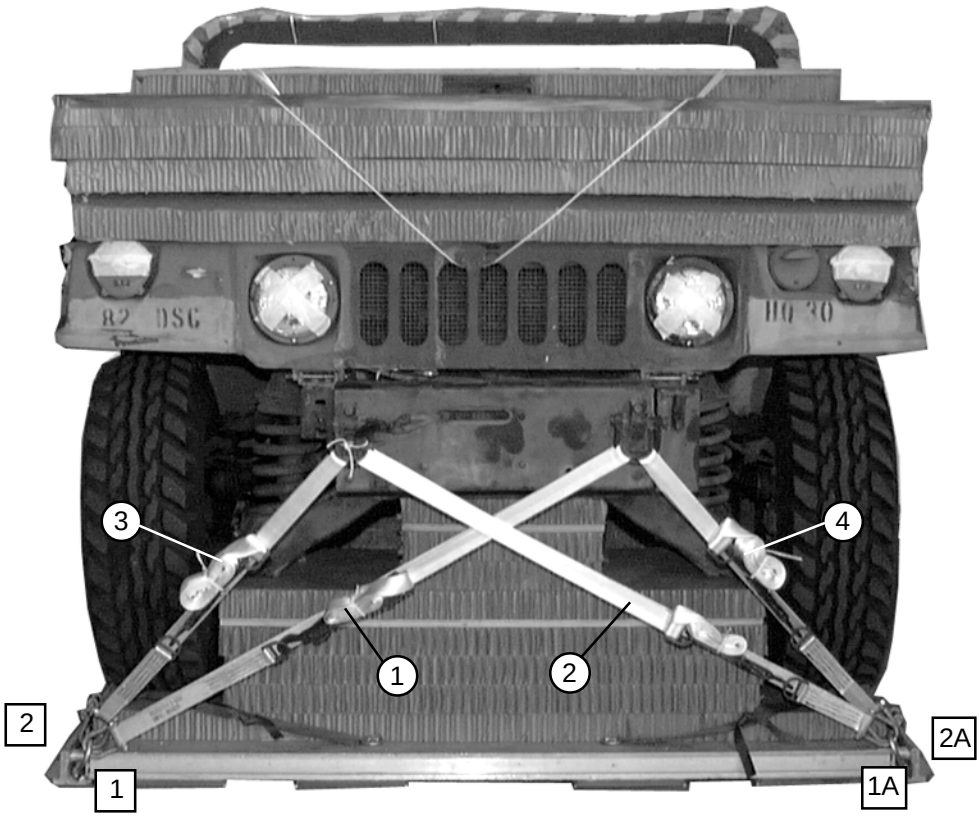

Lashing Number	**Tiedown** Clevis Number	**Instructions**
		Pass lashing:
1	1	Through left front tiedown point
2	1A	Through right front tiedown point
3	2	Through right front tiedown point
4	2A	Through left front tiedown point

Figure 4-14. Lashings 1 through 4 Installed

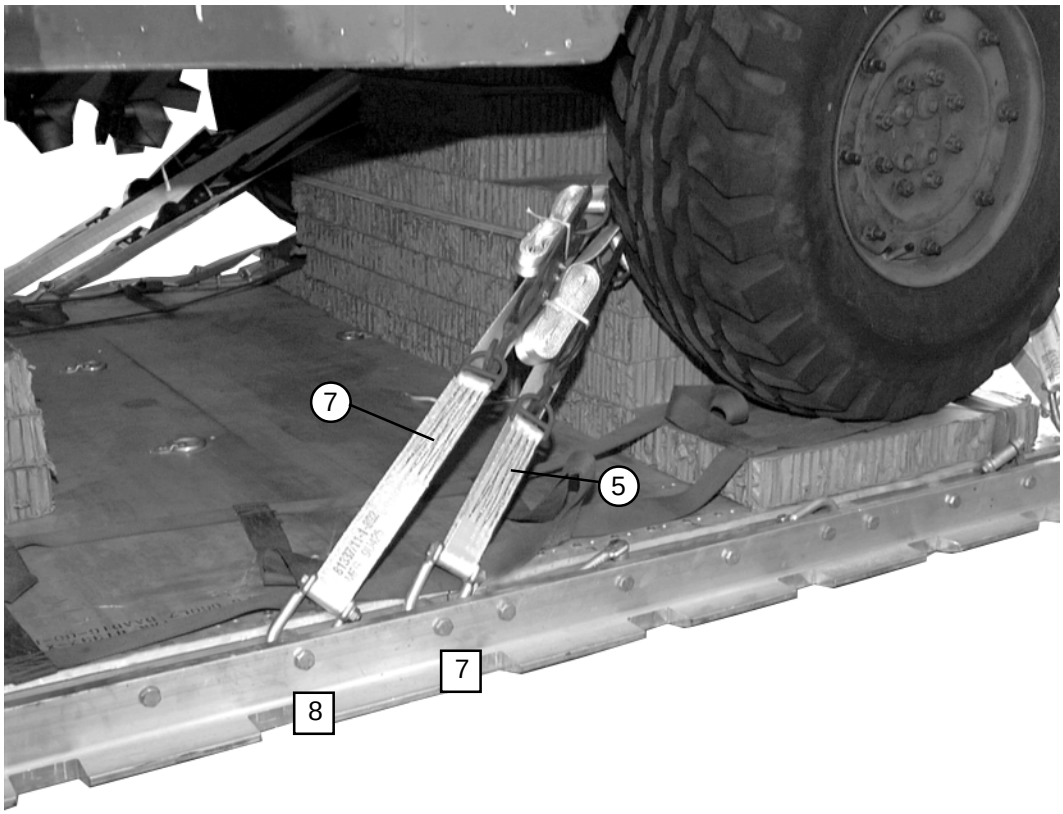

Lashing Number	**Tiedown** Clevis Number	**Instructions**
		Pass lashing:
5	6	Around right front lower control arm
6	6A	Around left front lower control arm
7	7	Through tiedown bracket behind right front coil spring
8	7A	Through tiedown bracket behind left front coil spring

Figure 4-15. Lashings 5 through 8 Installed

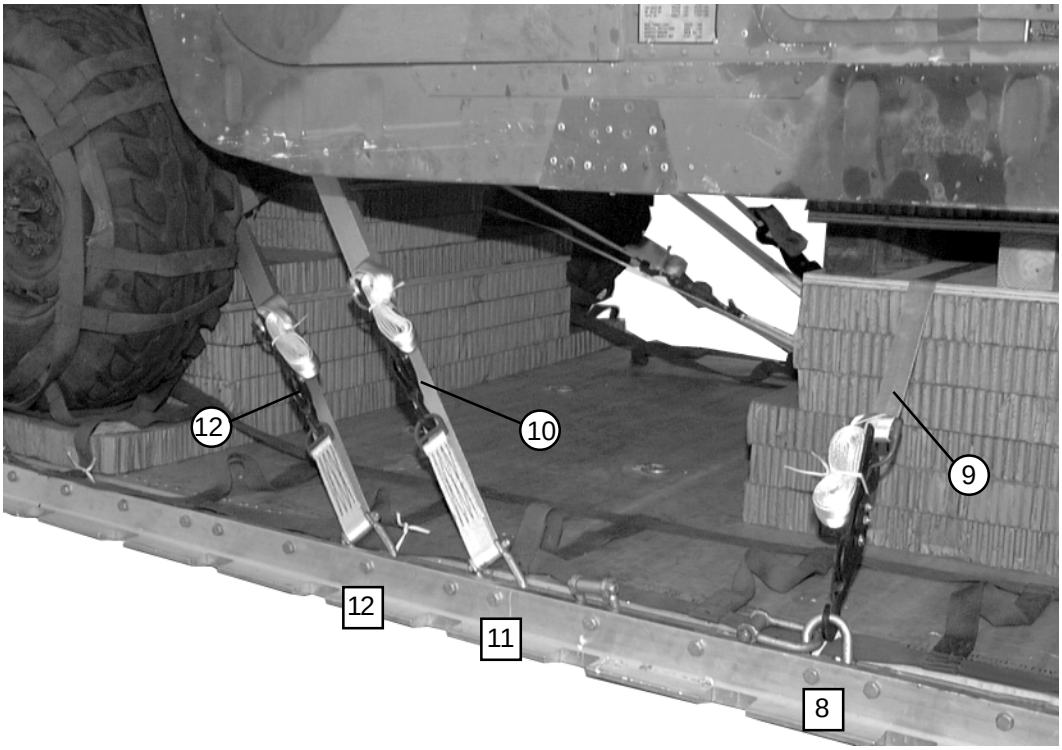

Lashing Number	**Tiedown** Clevis Number	**Instructions**
		Pass lashing:
9	8A and 8	Through clevis 8A and back through it's own D-ring through stack 2, Load bind to clevis 8
10	11	Through tiedown bracket in front of right rear coil spring
11	11A	Through tiedown bracket in front of left rear coil spring
12	12	Around right rear lower control arm
13	12A	Around left rear lower control arm

Figure 4-16. Lashings 9 through 13 Installed

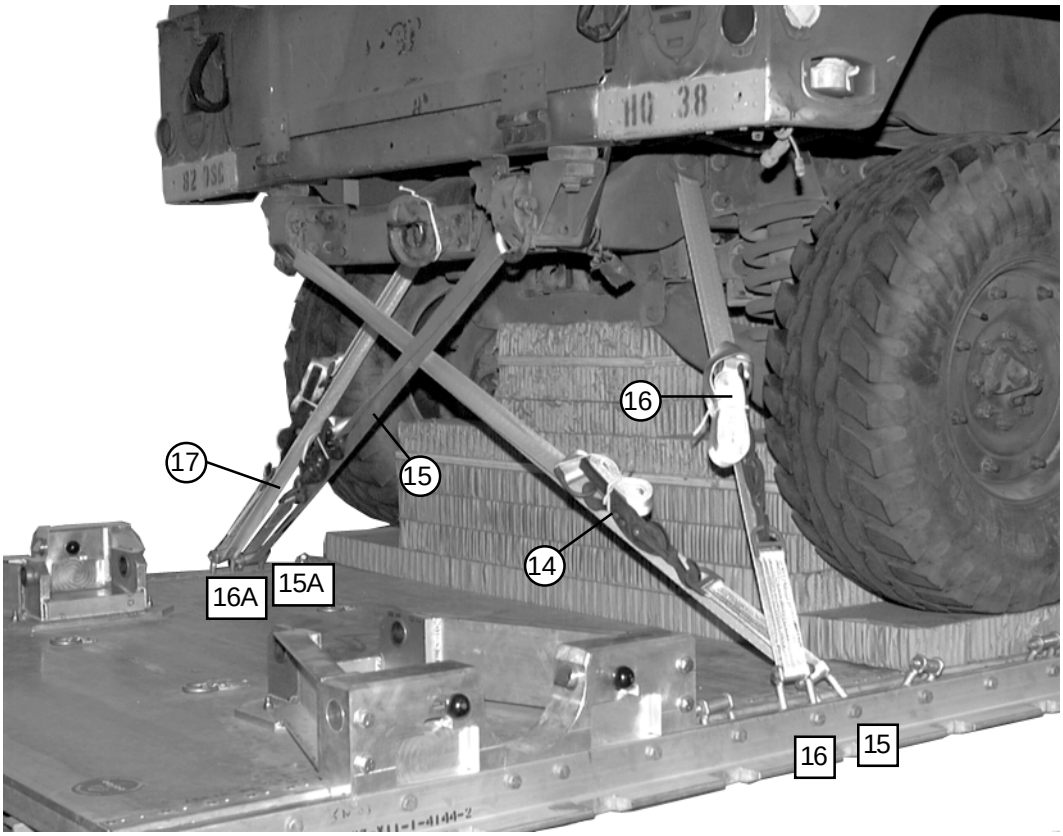

Lashing Number	**Tiedown** Clevis Number	**Intructions**
		Pass lashing:
14	15	Through left rear tiedown point
15	15A	Through right rear tiedown point
16	16	Through right rear tiedown point behind the coil spring
17	16A	Through left rear tiedown point behind the coil spring

Figure 4-17. Lashings 14 through 17 Installed

INSTALLING SUSPENSION SLINGS AND REAR ATTITUDE CONTROL SYSTEM

4-9. Construct, inspect, and position the rear Attitude Control System (ACS) according to Chapter 3 and as shown in Figure 4-18. Install the suspension slings and secure ACS according to Chapter 3 and as shown in Figure 4-19.

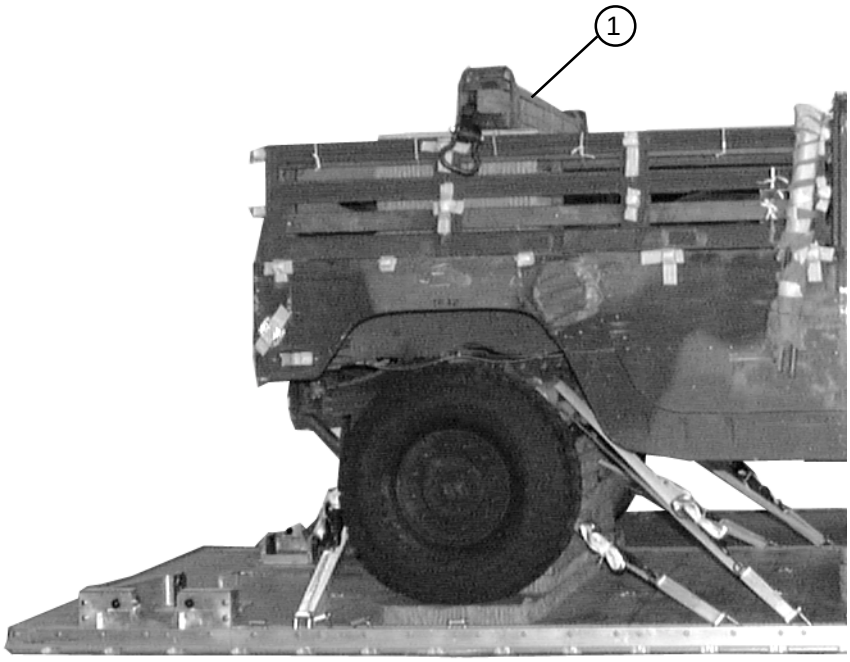

1 Position the rear ACS on the rear ACS support stacks 12 inches from the rear of the stacks with the 4x4 lumber facing the front of the truck.

CAUTION
Insure the ACS is centered on the load.

Figure 4-18. Rear Attitude Control System Positioned

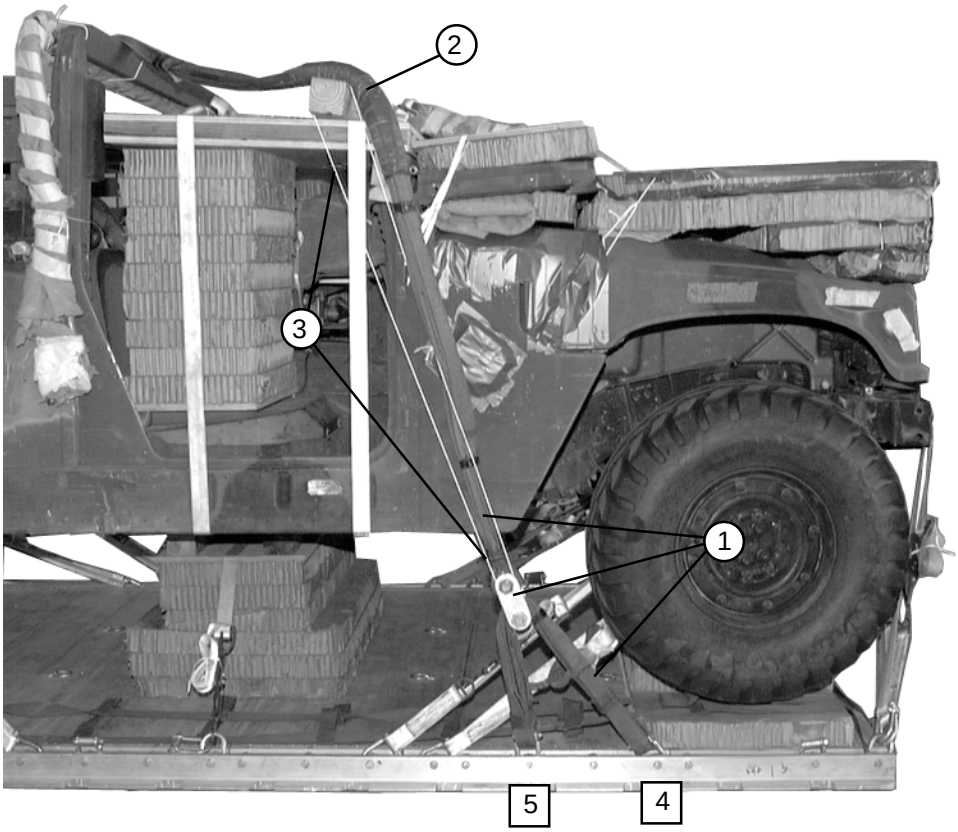

1. Install a 3-foot (4-loop), type XXVI nylon sling to clevises 4 and 5. Connect an 11-foot (4-loop), type XXVI nylon sling to the center of the 3-foot sling with a 3 3/4-inch two point link.

2. Route the sling over ACS 4x4 from front to rear. Pad and tape the 11-foot sling with felt from a point 6 inches below the 4x4 to a point 6-inches above the top of the ACS.

3. Safety tie the 3 3/4-inch two point link to the ACS 4x4 with a loop of type III nylon cord. Ensure the tie is tight.

4. Install a 3-foot (4-loop), type XXVI nylon sling to the other end of the 11-foot sling with a 3 3/4-inch two point link. Pad and tape the link with felt (not shown). See Chapter 3.

5. Repeat steps 1 through 4 on the left side of load using clevises 4A and 5A.

Figure 4-19. Slings Installed and ACS Secured

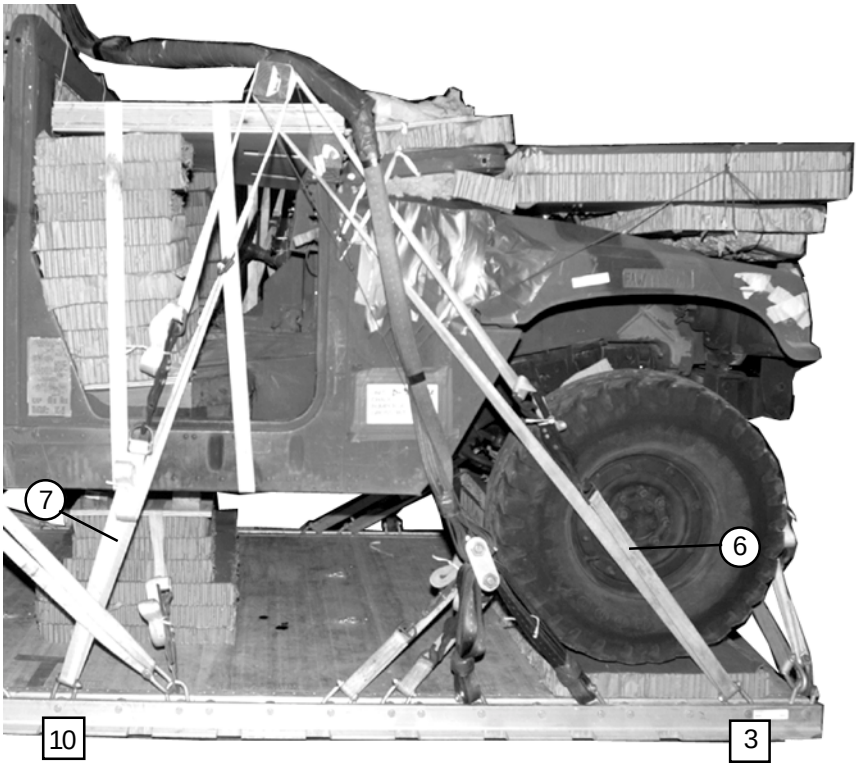

(6) Route a lashing from clevis 3 over right ACS 4x4 from rear to front, around the ACS 4 by 4-inch lumber and back to clevis 3.

(7) Route a lashing from clevis 10 under right ACS 4x4 from front to rear, up and around the ACS 4x4 and back to clevis 10.

(8) Repeat steps 7 through 9 on the left side of load using clevises 3A and 10A (not shown).

(9) Ensure the ACS is straight and centered on load. Load binders on both sides of the load must be closed at the same time in the following sequence: 3 and 3A, 10 and 10A.

Figure 4-19. Slings Installed and ACS Secured (Continued)

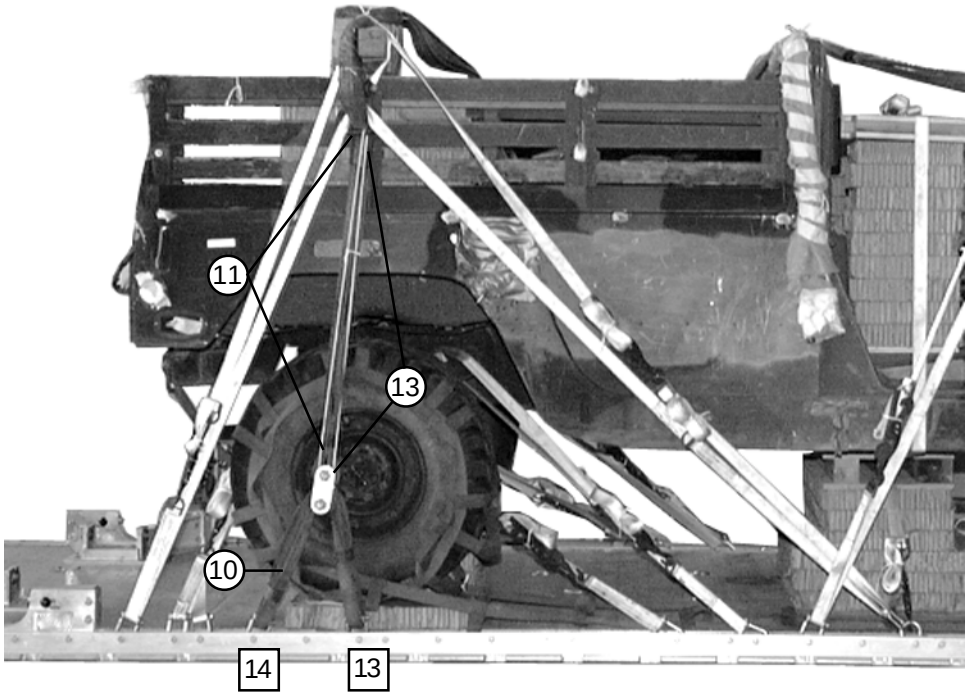

(10) Install a 3-foot (4-loop), type XXVI nylon sling to clevises 13 and 14. Connect an 11-foot (4-loop), type XXVI nylon sling to the center of the 3-foot sling with a 3 3/4-inch two point link.

(11) Route the sling through the clevis on the ACS from rear to front. Pad and tape the 11-foot sling with felt from a point 6 inches below the clevis to a point 6 inches above the top of the ACS.

(12) Safety tie the 3 3/4-inch two point link to the ACS clevis with a loop of type III nylon cord. Ensure the tie is tight.

(13) Install a 3-foot (4-loop), type XXVI nylon sling to the other end of the 11-foot sling with a 3 3/4-inch two point link. Pad and tape the link (not shown). See Chapter 3.

(14) Repeat steps 10 through 13 on the left side using clevises 13A and 14A (not shown).

Figure 4-19. Slings Installed and ACS Secured (Continued)

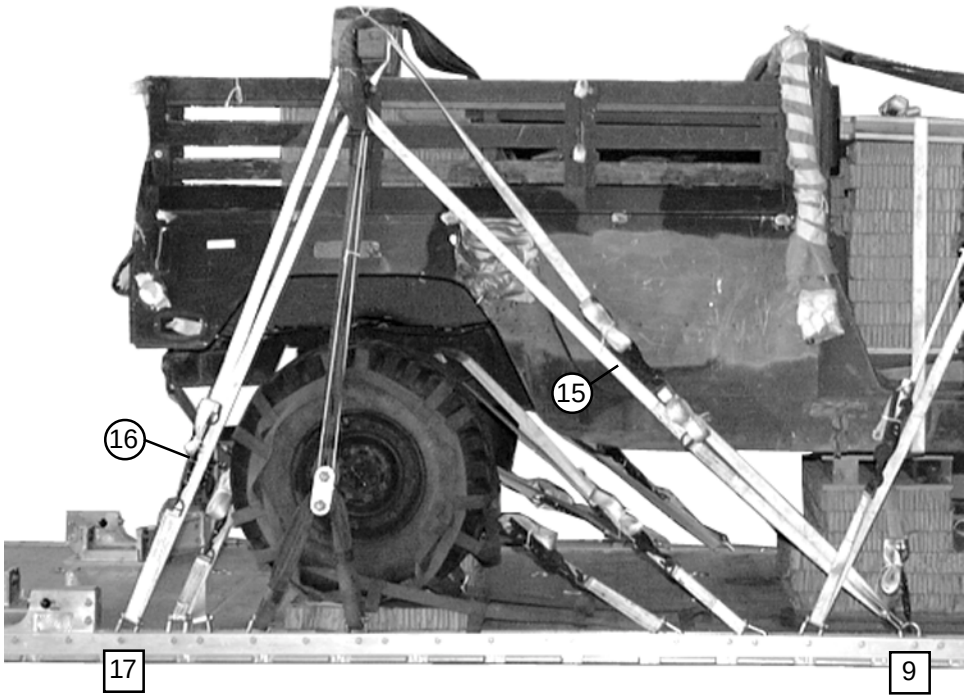

(15) Route a 30-foot lashing from clevis 9, through the right rear ACS clevis from outside to inside, rear to front, around the ACS 4x4 and back to clevis 9.

(16) Route a lashing from clevis 17 through right rear ACS clevis from outside to inside, front to rear, around ACS 4x4 and back to clevis 17.

(17) Repeat steps 15 and 16 on left side of load using clevises 9A and 17A (not shown).

Figure 4-19. Slings Installed and ACS Secured (Continued)

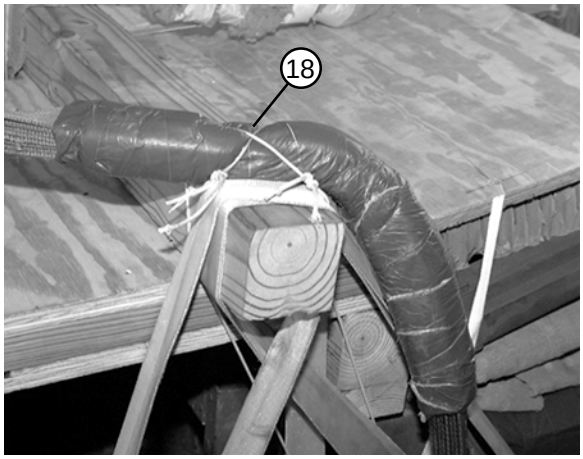

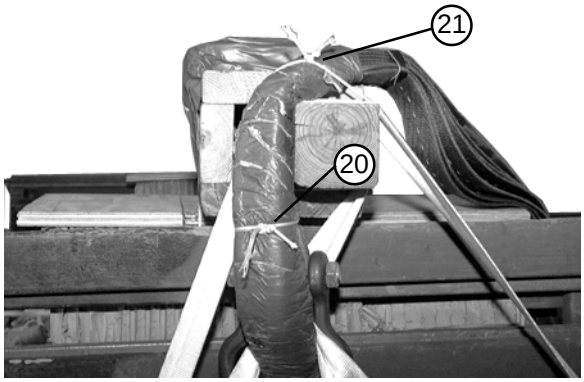

(18) Remove all slack from the front sling and lay sling across the top of the ACS 4x4 from front to rear. Tie two lengths of type III nylon cord over the sling, behind all lashings, and around ACS 4x4 forming a crisscross pattern.

(19) Repeat step 18 for left front sling(not shown).

(20) Remove all slack from the rear sling. Tie a length of type III nylon cord around the 11-foot sling and the ACS sling.

(21) Tie a length of type III nylon cord around the 11-foot nylon sling, behind all lashings, and the ACS 4x4, tie the ends together.

(22) Repeat steps 20 and 21 for left rear sling(not shown).

Figure 4-19. Slings Installed and ACS Secured (Continued)

INSTALLING OUTRIGGER ASSEMBLIES

4-10. Assemble, install, and safety the mast and foot assemblies on the DRAS platform according to TM 10-1670-268-20&P/TO 13C7-52-22 and as shown in Chapter 3, Figures 3-33 through 3-35 and Figure 3-36 steps 1,2,and 3.

STOWING CARGO PARACHUTES

4-11. Prepare, stow, and restrain three G-11D cargo parachutes on top of the hood of the truck as shown in Chapter 3 and as shown in Figure 4-20.

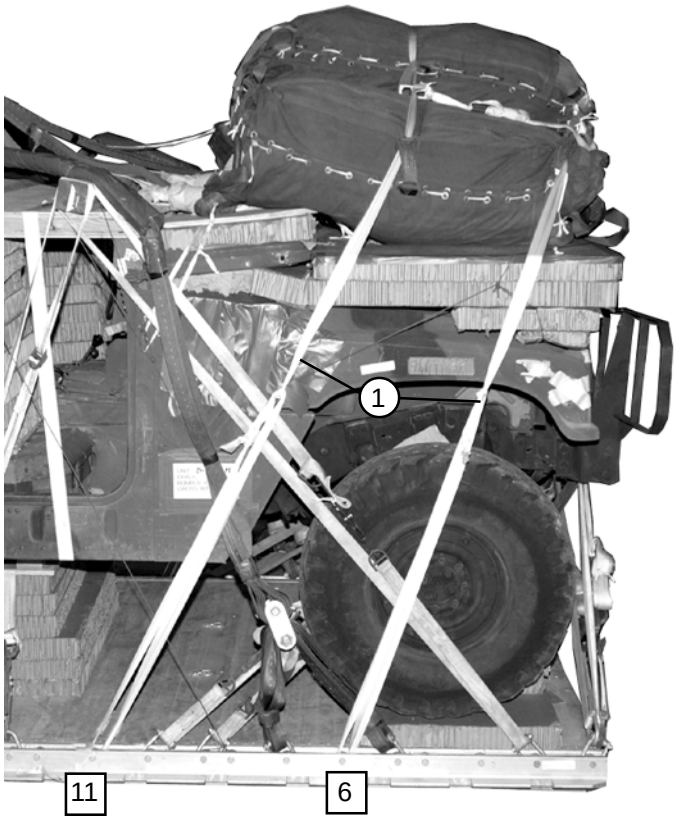

(1) Restrain the parachutes using type VIII nylon webbing tied to bushings 6, 6A, 11, and 11A.

Figure 4-20. Cargo Parachutes Installed

STOWING DEPLOYMENT PARACHUTE

4-12. Prepare, stow, and install the deployment parachute according to Chapter 3, Section IV and as shown in Figure 4-21.

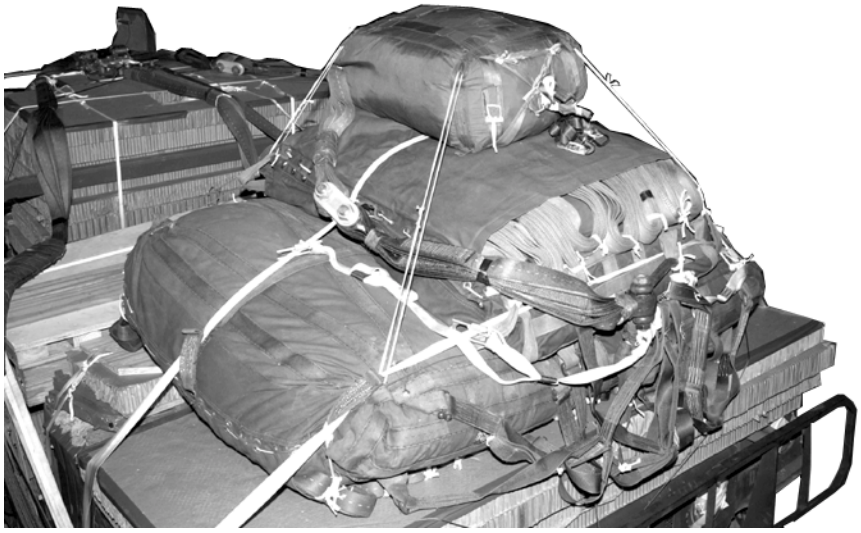

Figure 4-21. Deployment Parachute Installed

INSTALLING PARACHUTE RELEASE SYSTEM

4-13. Build an M-1 release stack as shown in Figure 4-22.
Prepare and install an M-1 release system according to Chapter 3, Section V and as shown in Figure 4-23.

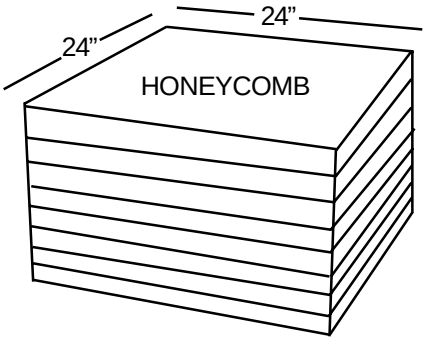

NOTE: Drawing not to scale.
All dimensions are given in inches.

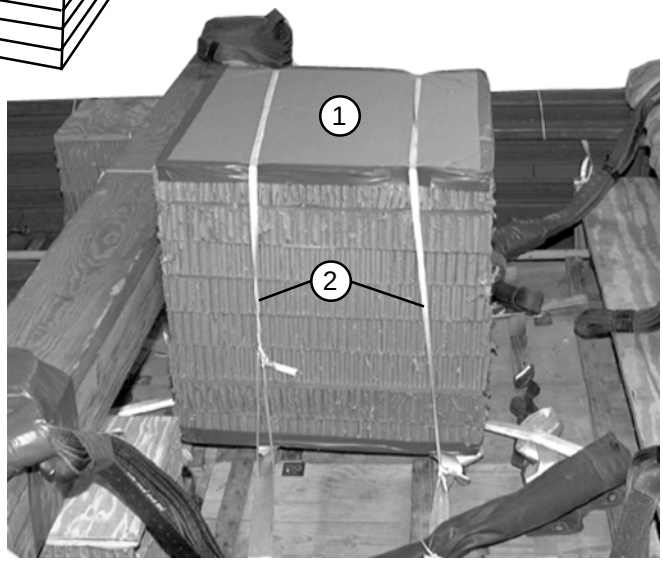

(1) Cut eight 24-by 24-inch pieces of honeycomb and glue together to form the M-1 release parachute stack. Ensure the support stack is higher than the highest point in the cargo bed. Tape the top edges of the honeycomb.

(2) Center the M-1 release support stack in front of the rear ACS. Secure the support stack to convenient points in the cargo bed with two lengths of 1/2-inch tubular nylon webbing.

Figure 4-22. Parachute Release Stack Positioned

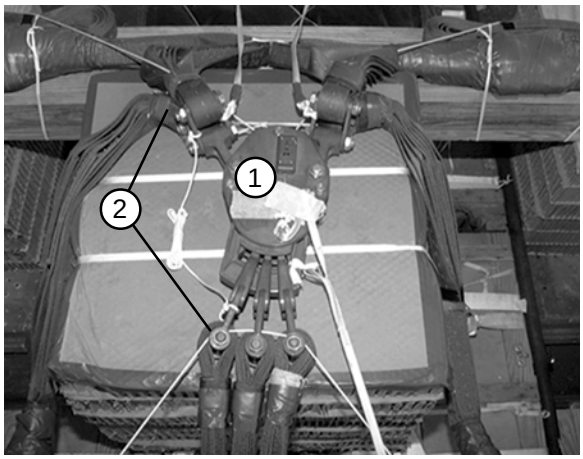

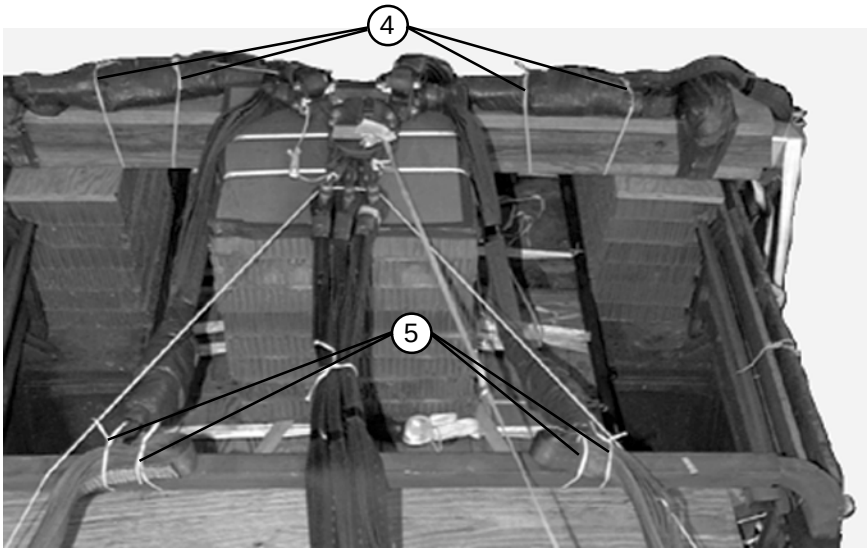

1. Center the M-1 release on the support stack and safety tie to a convenient place on the load with type III nylon cord.

2. Attach riser extensions and suspension slings to the M-1. **NOTE:** Remove the buffers from the ends of the suspension slings that attach to the M-1.

3. Group the riser extentions together and tie with type I, 1/4-inch cotton webbing, making three ties (not shown).

4. S-fold the slack in the rear suspension slings on top of the rear ACS. Make two ties with type I, 1/4-inch cotton webbing around each sling and the rear ACS.

5. S-fold the slack in the front suspension slings on top of the crew compartment cross member. Make two ties with type I, 1/4-inch cotton webbing around each sling and the cross member.

Figure 4-23. Parachute Release System

INSTALLING MAST RELEASE KNIVES

4-14. Install the mast release knives according to Chapter 3, Figure 3-36, steps 4 through 10 and as shown in Figure 4-24.

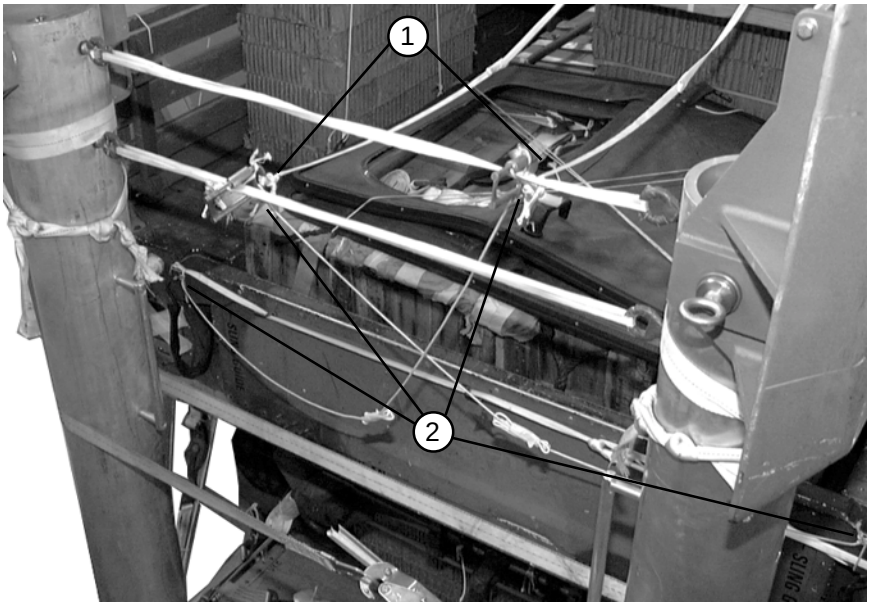

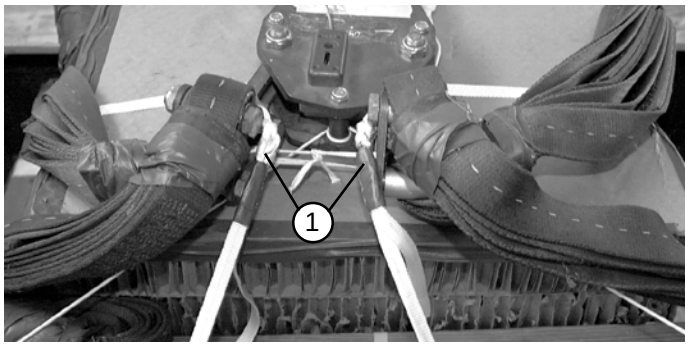

(1) The length of the left and right 1/2-inch tubular nylon webbing from the base of the guillotine knives to the lower suspension links of the M-1 release is 67 inches (shown in steps 5 through 7 of Figure 3-36).

(2) Tie a length of type III nylon cord through the left tailgate sling guide and to the body of the right top guillotine knife that measures 86-inches from the tailgate sling guide to the base of the guillotine knife. Repeat for right tailgate sling guide and left lower guillotine knife (shown in steps 9 and 10 of Figure 3-36).

Figure 4-24. Mast Release Knives Installed

MARKING RIGGED LOAD

4-15. Mark the rigged load according to Chapter 3 and as shown in Figure 4-25. A Shipper's Declaration for Dangerous Goods is required.

EQUIPMENT REQUIRED

4-16. The equipment required to rig these loads are given in Table 4-1.

CAUTION
Make the final rigger inspection required by Chapter 3 before load leaves rigging site.

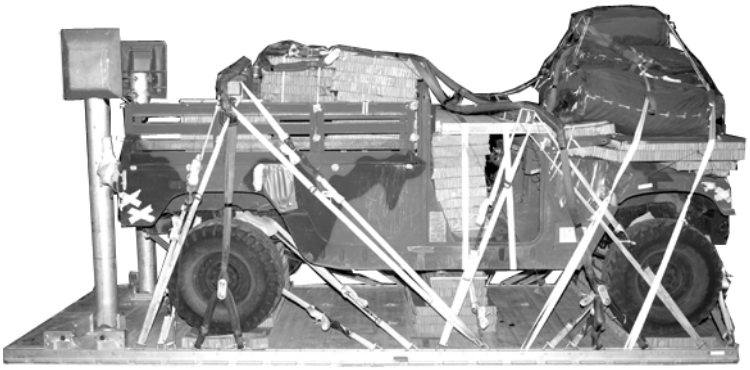

RIGGED LOAD

Weight: M998 ..... 10,912 pounds
M1038 ..... 11,165 pounds
M1097 ..... 10,097 pounds
Height ..... 98 inches
Width ..... 94 inches
Overall Length ..... 229 inches
Overhang: Front ..... 12 inches
Rear ..... 0 inches
Center of Balance (from front edge of platform):
M998 ..... 89 inches
M1038 ..... 91 inches
M1097 ..... 90 inches

Figure 4-25. M998/M1038/M1097 Cargo/Troop Carriers Rigged for Dual Row Airdrop

Table 4-1. Equipment required for rigging M998/M1038/M1097 cargo/troop carriers for dual row airdrop.

National Stock Number	Item	Quantity
8040-00-273-8713	Adhesive paste, 1-gal	As required
4020-00-240-2146	Cord, nylon, type III, 550-lb	As required
4030-00-090-5354	Clevis, large	3
4030-00-678-8562	Clevis, medium	2
	Link assembly:	
	Two-point, 3 3/4-in	9
5306-00-435-8994	Bolt, 1-in diam, 4-in long	18
5310-00-232-5165	Nut, 1-in, hexagonal	18
1670-00-003-1953	Plate, side, 3 3/4-in	18
5365-00-007-3414	Spacer, large	18
	Lumber:	
5510-00-220-6146	2- by 4-in	As required
5510-00-220-6148	2- by 6-in	As required
5510-00-220-6274	4- by 4-in	As required
5530-00-618-8073	Plywood, 3/4-in	5 sheets
	Nail, steel wire, common,	
5315-00-010-4659	8d	As required
5315-00-753-3883	10d	As required
5315-00-010-4666	40d	
1670-00-753-3928	Pad, energy dissipating, honeycomb, 3- by 36- by 96-in	18 sheets
1670-01-487-5461	Static line assembly release away	1
	Parachute:	
	Cargo:	
1670-01-016-7841	G-11D	3
	Cargo extraction: (deployment parachute)	
1670-00-040-8135	28-foot	1
	Platform, dual row, 18-foot	
1670-01-485-1654	Rail, DRAS	2
1670-01-486-1342	Roller Pad, DRAS	4
1670-01-486-1656	Panel Assembly, Main	9

Table 4-1. Equipment required for rigging M998/M1038/M1097 cargo/troop carriers for dual row airdrop (continued).

National Stock Number	Item	Quantity
1670-01-162-2372	Clevis assembly	36
1670-01-097-8816	Release, cargo parachute, M-1	1
	Sling, cargo airdrop	
	For suspension:	
1670-01-062-6310	11-ft (4-loop), type XXVI nylon webbing	4
1670-01-062-6306	3-ft (4-loop), type XXVI nylon webbing	8
	For deployment:	
1670-01-062-6306	3-ft (4-loop), type XXVI nylon webbing	1
	For riser extention:	
1670-01-062-6313	60-ft (3-loop), type XXVI nylon webbing	3
	For ACS:	
1670-01-063-7761	16-ft (2-loop), type XXVI nylon webbing	1
	For lifting:	
1670-01-062-6304	9-ft (2-loop), type XXVI nylon webbing	2
1670-01-062-6303	12-ft (2-loop), type XXVI nylon webbing	2
1670-00-040-8219	Strap, parachute release, multicut	2
1670-00-937-0271	Knife release,cargo (guillotine)	2
1670-01-487-5464	Outrigger assembly	2
7510-00-266-5016	Tape, adhesive, 2-in	As required
1670-00-937-0271	Tie-down assembly, 15-ft	45
1670-00-725-1437	Tie-down, cargo, aircraft, (CGU-1B)	3
	Webbing:	
8305-00-268-2411	Cotton, 1/4-in, type I	As required
	Nylon:	
8305-00-082-5752	Tubular, 1/2-in	As required
8305-00-263-3591	Type VIII	As required

Chapter 5

RIGGING DUAL ROW AIRDROP SYSTEM (DRAS) M1025/ M1121/M1114 ARMAMENT/ TOW CARRIER HMMWV

SECTION I - RIGGING DUAL ROW AIRDROP SYSTEM (DRAS) M1025 / M1121 / ARMAMENT/ TOW CARRIER HMMWV

DESCRIPTION OF LOAD

5-1. The HMMWV truck is rigged on a DRAS platform for DRAS airdrop. An accompanying load weighing a minimum of 800 pounds and a maximum of 2,000 pounds must be rigged in the truck. The load is rigged with three G-11D cargo parachutes.

a. The M1025 Armanment Carrier (Figure 5-1) weighs 5,960 pounds. It is 180 inches long, 85 inches wide and is 74 inches high.

b. The M1025A1 Armament Carrier weighs 6,140 pounds. It is 180 inches long, 85 inches wide and is 74 inches high.

c. The M1025A2 Armament Carrier weighs 6,780 pounds. It is 180 inches long, 85 inches wide and is 74 inches high.

d. The M1121 TOW Carrier weighs 7,900 pounds. It is 180 inches long, 85 inches wide, and 74 inches high.

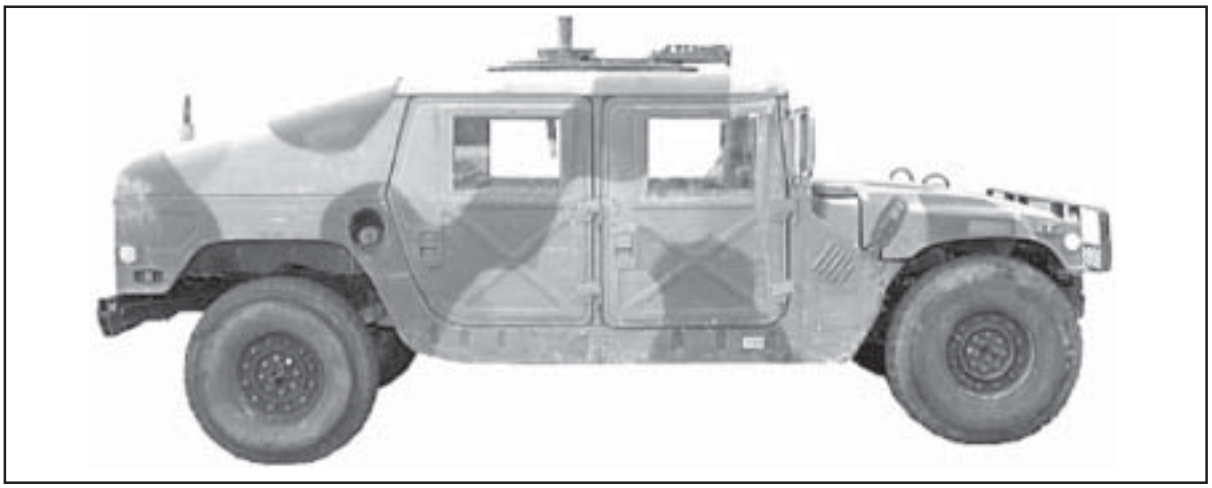

Figure 5-1. M1025/ M1121 Armament/TOW Carrier HMMWV

PREPARING PLATFORM

5-2. Inspect, or assemble and inspect, a DRAS platform with outrigger assemblies, outrigger platform support weldments, and link assemblies according to TM 10-1670-268-20&P/TO 13C7-52-22, and as shown in Figure 4-2.

BUILDING AND PLACING HONEYCOMB STACK

5-3. Prepare the honeycomb stacks for the trucks as shown in Figure 4-3. Position the honeycomb stacks as shown in Figure 4-4.

INSTALLING OPTIONAL DRIVE- OFF AID ON PLATFORM

5-4. Install the drive-off aid as shown in Figure 3-5.

PREPARING M1025/M1121 TRUCK

5-5. Prepare the M1025/M1121 truck as described below.

a. Prepare the fuel tank as shown in Figures 4-5 and 4-6.

NOTE: Certain units may be authorized a waiver allowing 95% fuel. One way to verify the tank is 95% full is to fill the tank and withdraw 1 1/4 gallons with a hand pump.

CAUTION
A full tank does not allow for expansion,
and is a danger to aircraft and air crew.

b. Make sure the batteries and battery compartment comply with AFMAN(I) 24-204/TM 38-250.

c. Prepare the cab of the truck as shown in Figure 5-2.

d. Secure and pad radio equipment in the cab section as shown in Figure 5-3.

e. Prepare the front of the trucks as shown in Figure 5-4.

f. Prepare the turret housing as shown in Figure 5-5.

g. Prepare and secure the pioneer tool kit according to TM 9-2320-280-10/ TO 36A12-1A-2091-1/ TM 2320-10/6 and as shown in Figure 4-10.

h. Prepare the underside of the truck as shown in Figure 4-11.

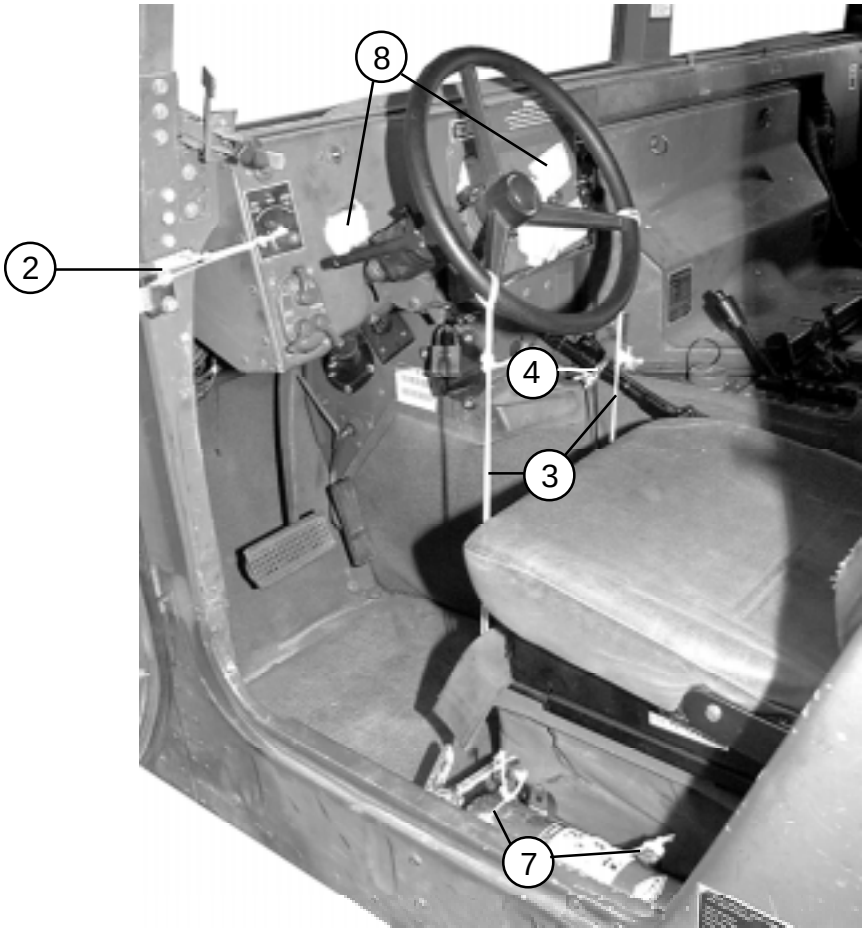

1. Pad the mirrors with cellulose wadding and tape (not shown).
2. Tie the engine start switch in the engine stop position with Type I, 1/4-inch cotton webbing.
3. Tie the steering wheel to the seat frame in two places with Type III nylon cord, or use the retractable steering wheel locking cable. If the locking cable is used, secure it to the steering wheel with Type III nylon cord, not a padlock.
4. Tie the emergency brake handle in the off position with Type III nylon cord.
5. Place the transmission and four-wheel drive levers in the neutral position.
6. Tie the seat cushions to the seat frames with Type III nylon cord (not shown).
7. Tie the fire extinguisher and decontamination apparatus in place in its designated rack with two lengths of Type III nylon cord.
8. Tape all lights, reflectors, windshield and instrument panel gauges.

Figure 5-2. Cab Prepared

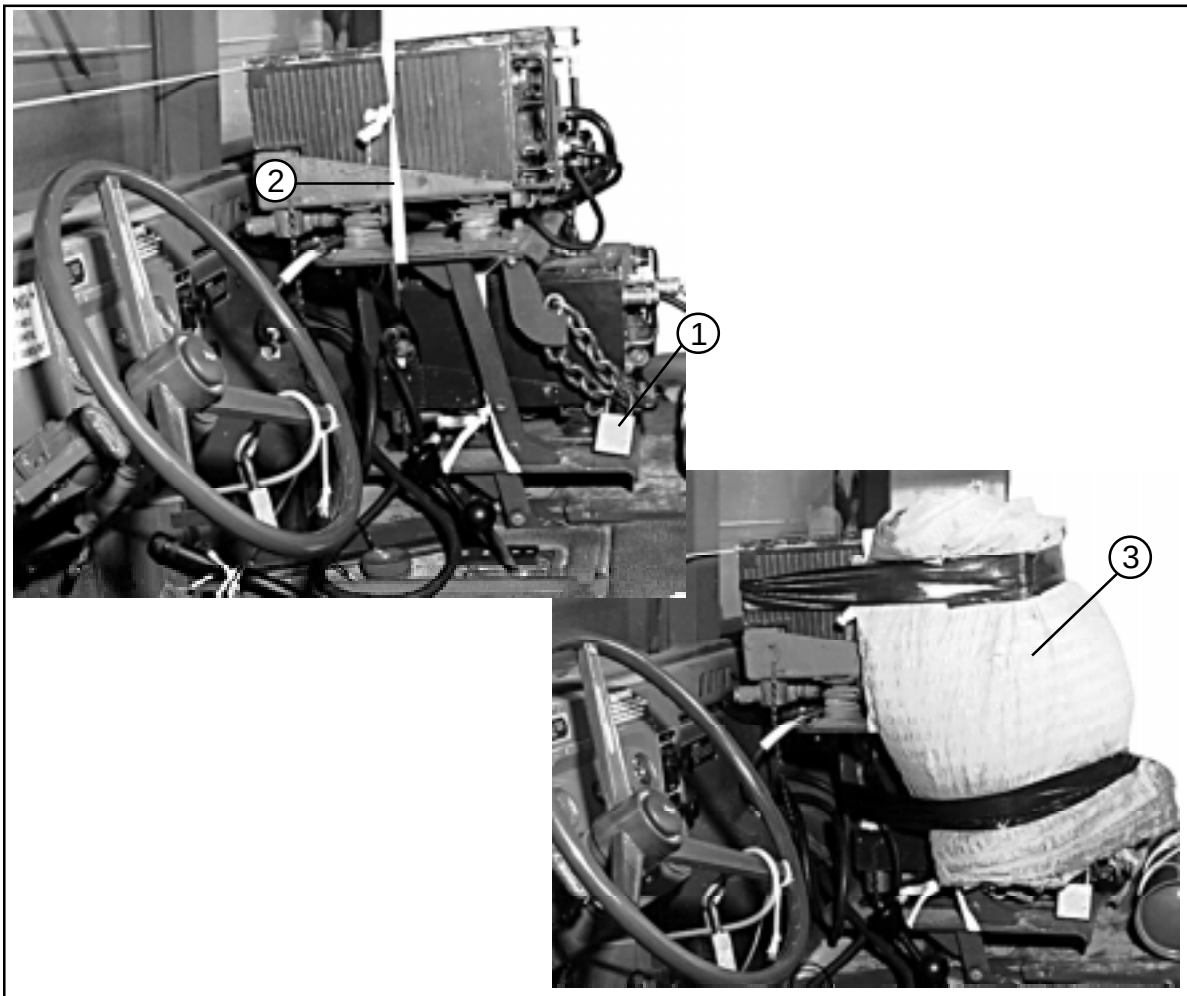

1. Secure communications equipment in its mount with chains and padlocks.
2. Tie the equipment to its mount with 1-inch tubular nylon webbing.
3. Pad the front of the equipment generously with cellulose wadding taped in place. Pad the radio handset with cellulose wadding and tie the handset to the mount with Type III nylon cord.
4. Remove antennas and pad the antenna mounts with cellulose wadding taped in place.

Figure 5-3. Communications Equipment Secured and Padded

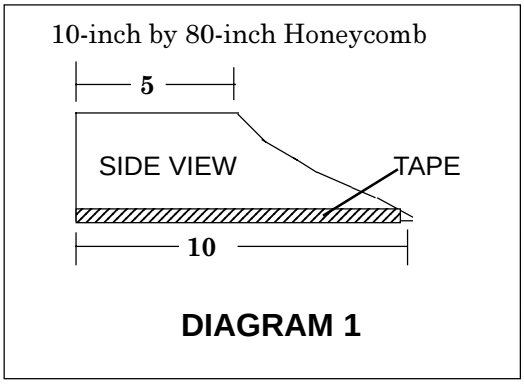

NOTES: 1. Drawing is not to scale.
2. All dimensions are given in inches.

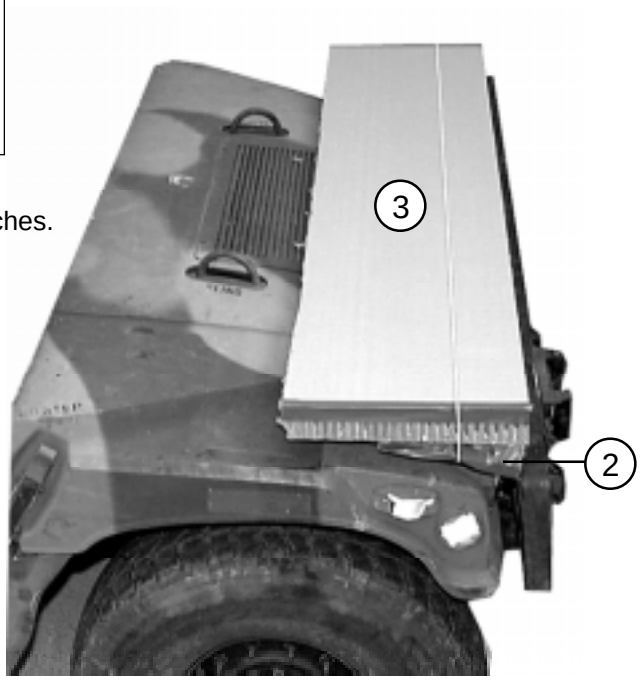

1. Cut a 10-inch by 80-inch piece of honeycomb. Taper crush 5 inches of the width along the entire length of the honeycomb. Tape the 10-inch width of the honeycomb (See diagram 1).

2. Place the honeycomb flush on the front end of the hood with the tapered side up and to the rear of the truck.

3. Cut an 18-inch by 80-inch piece of honeycomb. Position on top of and flush with the front of the 10-inch by 80-inch piece of honeycomb. Tie the two pieces of honeycomb together with Type III nylon cord around the 80 inch length. Tape the top piece of honeycomb where the Type III nylon cord will come in contact.

4. Secure the winch hook with Type III nylon cord (not shown).

Figure 5-4. Front of Truck Prepared

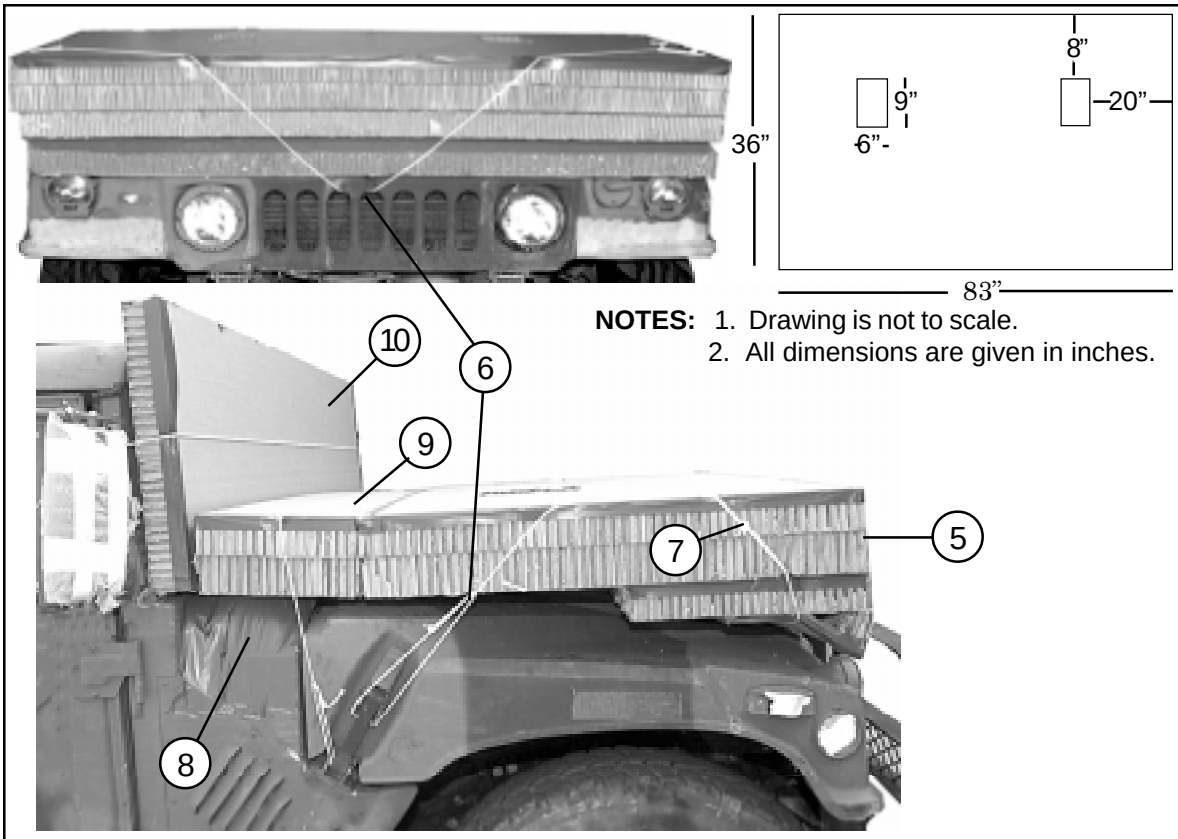

(5) Place two 36-inch by 83-inch pieces of honeycomb, with cutouts as shown, on top of the previously positioned honeycomb and flush with the front. Tape the 36-inch sides on the top piece of honeycomb.

(6) Secure the 36-inch by 83-inch honeycomb pieces with a length of Type III nylon cord. Tie the Type III nylon cord to the left hood latch. Pass the cord over the honeycomb, through the center of the grille, and over to the right side of the honeycomb. Tie the cord to the right hood latch.

(7) Run a length of Type III nylon cord through the securing tie on the bottom two layers of honeycomb and through the securing tie on the top two layers of honeycomb on each side of the load.

(8) Cover the breather cap with one layer of felt and tape in place with cloth backed tape.

(9) Cut two 12-inch by 83-inch pieces of honeycomb and position behind the honeycomb installed in step 5. Tape the top outside edges. Secure the honeycomb to the hood latches with Type III nylon cord. Tape the hood latches.

(10) Cut a 21-inch by 83-inch piece of honeycomb. Position the honeycomb on the windshield. Tape the outside edges and secure with Type III nylon around the windshield.

Figure 5-4. Front of Truck Prepared (Continued)

NOTES 1. These drawings are not drawn to scale.
2. All dimension are given in inches.

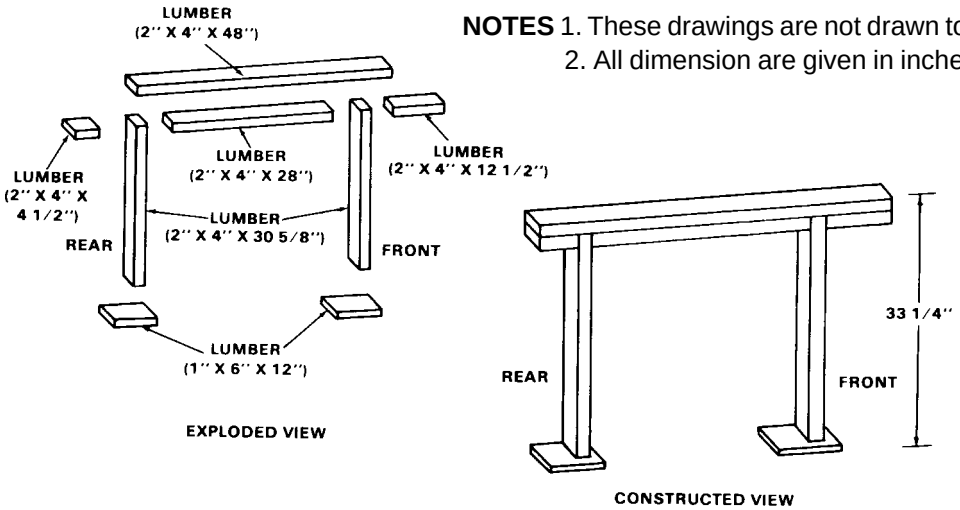

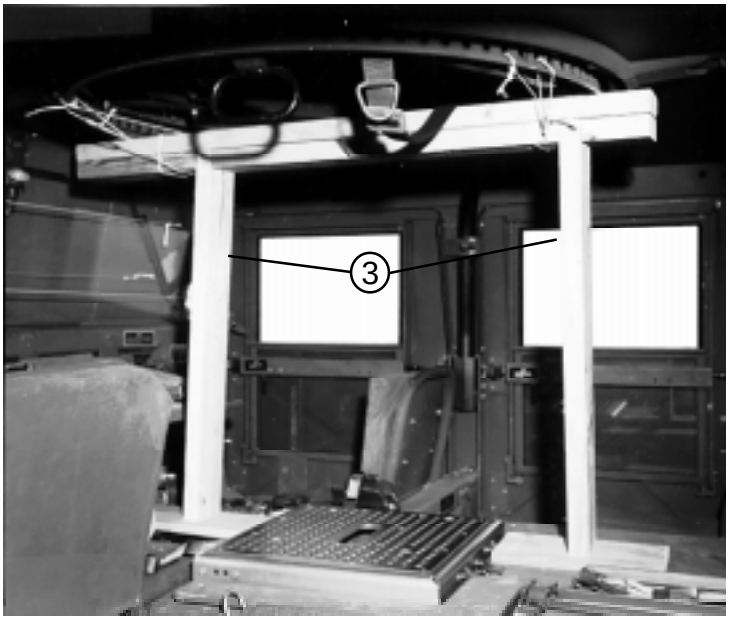

1. Build the turret housing support as shown. Nail the lumber together with 8d nails.
2. Close the turret cover and secure it with the fasteners provided (not shown).
3. Center the support under the turret housing with the front end of the support toward the front end of the truck. Tie the support in place with two lengths of 1/2-inch tubular nylon webbing.

Figure 5-5. Turret Support Built and Placed

STOWING ACCOMPANYING LOAD ON M1025 ARMAMENT CARRIER

5-6. Use the procedures shown in Figure 5-6 to stow ten 105-millimeter ammunition boxes and truck equipment.

> CAUTION
> Load weight limits of 800-2,000 pounds and CB requirements given in Chapter 1 must be strictly observed.

NOTE: The accompanying load rigging procedures for the M1121 TOW Carrier differ from those for the M1025 procedures and are given in paragraph 5-7.

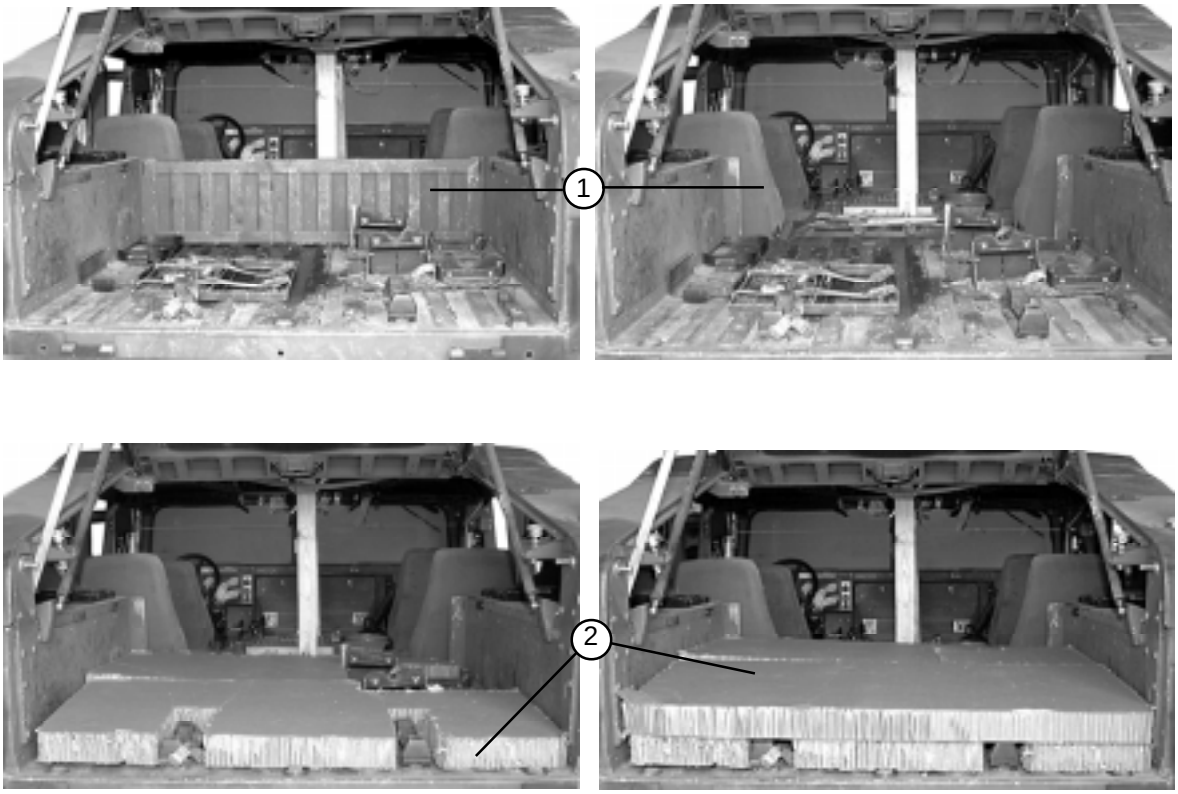

1. Remove the panel behind the rear seats and set it aside.
2. Cut and position two layers of honeycomb in the bed of the vehicle. Make cutouts in the bottom layer to accomodate the fixtures on the truck floor. Do not cover the front and rear tiedown rings.

Figure 5-6. M1025 Accompanying Load Stowed

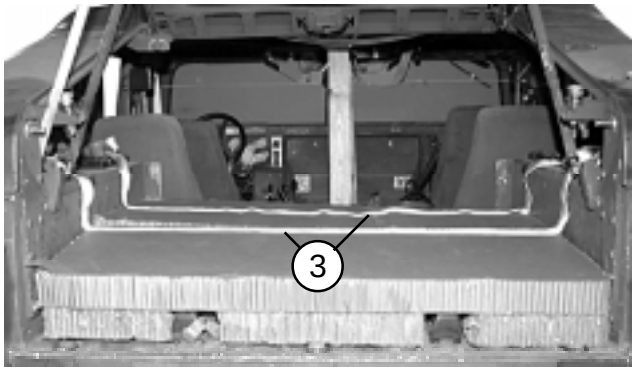

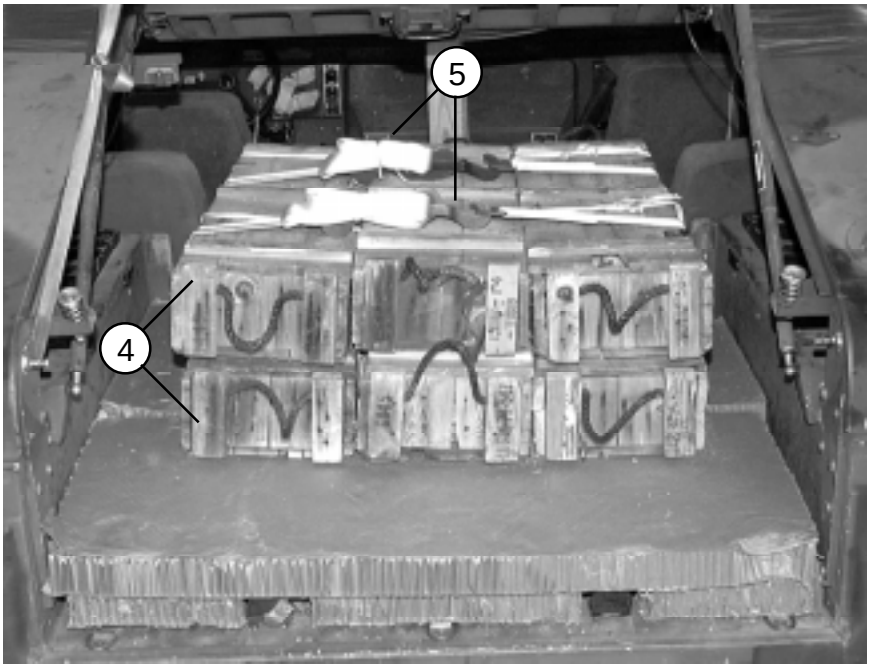

(3) Position two lashings across the bed of the vehicle at 21-inches and 38-inches from the rear edge of the honeycomb.

(4) Center two layers of three ammuniton boxes on the lashings in step 3.

(5) Secure the lashings placed in step 3 with D-rings and load binders.

Figure 5-6. M1025 Accompanying Load Stowed (continued)

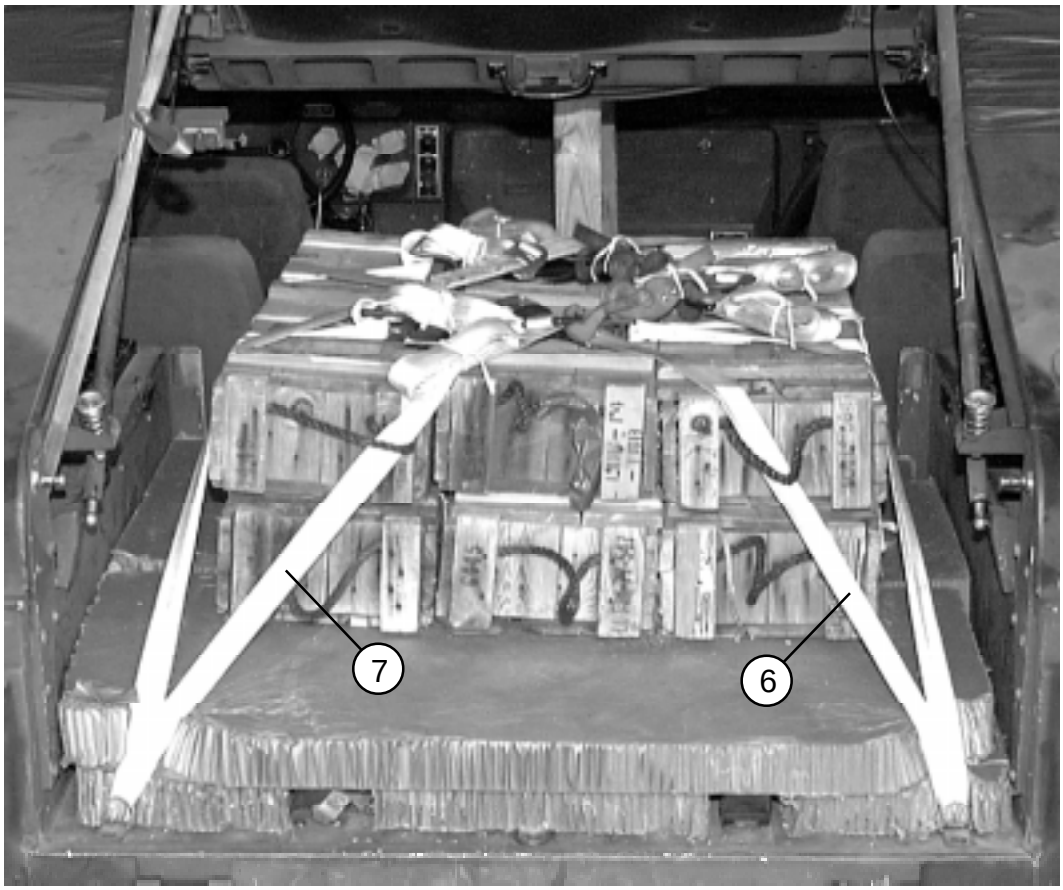

(6) Route a 30-foot lashing through the right rear tiedown, over the ammunition boxes, and through the left front tiedown. Close the lashing with D-rings and a load binder on top of the boxes.

(7) Route a 30-foot lashing through the left rear tiedown, over the ammunition boxes, and through the right front tiedown. Close the lashing with D-rings and a load binder on top of the boxes.

Figure 5-6. M1025 Accompanying Load Stowed (continued)

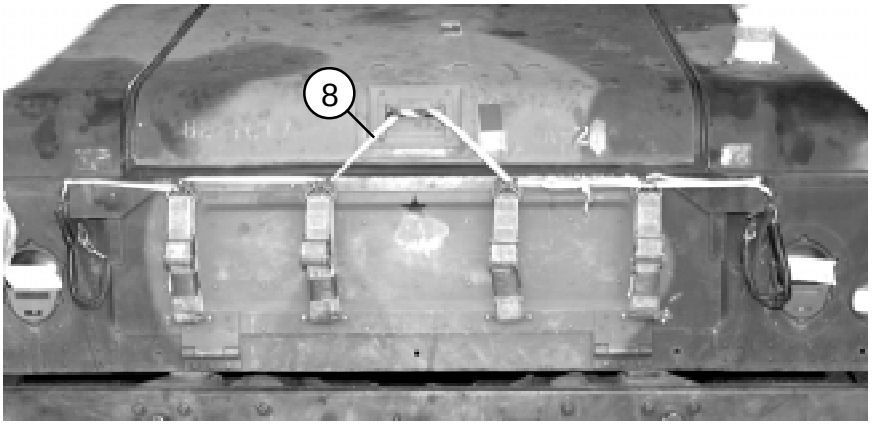

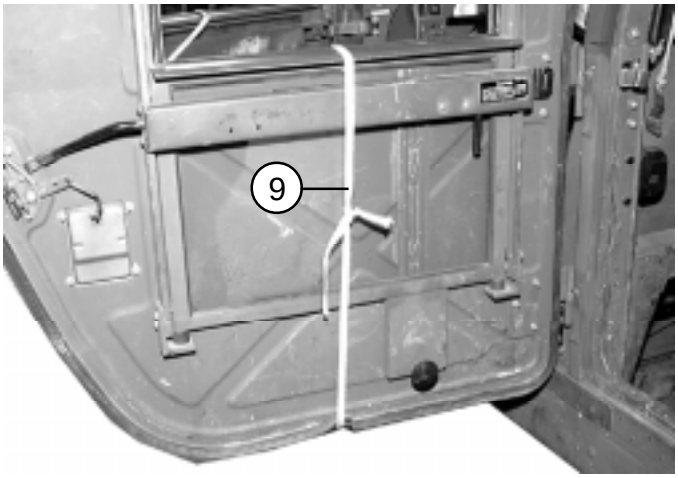

(8) Close the tailgate and hatch. Secure the tailgate and hatch with a doubled length of 1/2-inch tubular nylon webbing.

(9) Lower all windows. Secure all windows in the lowered position with a length of 1/2-inch tubular nylon webbing.

Figure 5-6. M1025 Accompanying Load Stowed (continued)

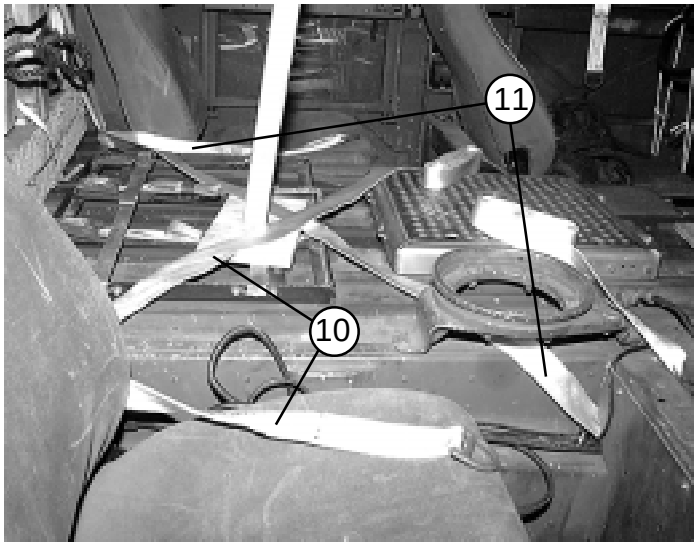

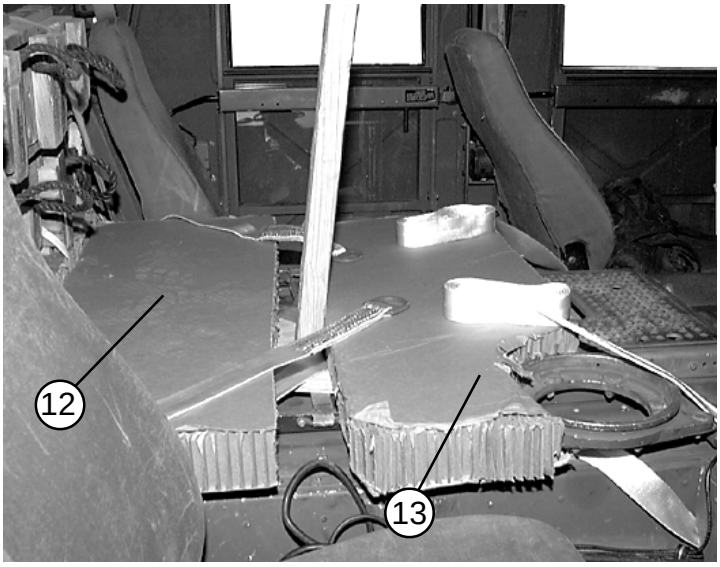

(10) Run a 30-foot lashing through the tie-down ring behind the right passenger seat. Rest the short end of the lashing on the right passenger seat. Run the long end of the lashing over the base of the turret support, and pass it around the cross bar behind the driver's seat.

(11) Run a 30-foot lashing through the tie-down ring behind the left passenger seat. Rest the short end of the lashing on the left passenger seat. Run the long end of the lashing over the base of the turret support, and pass it around the cross bar behind the right front seat.

(12) Center a 14- by 38-inch piece of honeycomb between the rear passenger seats.

(13) Center a 14- by 38-inch piece of honeycomb ahead of the turret support leg. Make a cutout to allow for the traversing unit stowage pedestal.

Figure 5-6. M1025 Accompanying Load Stowed (continued)

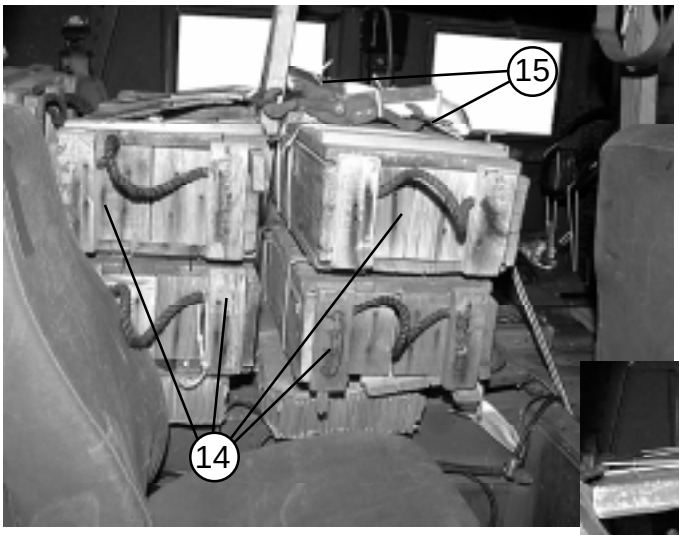

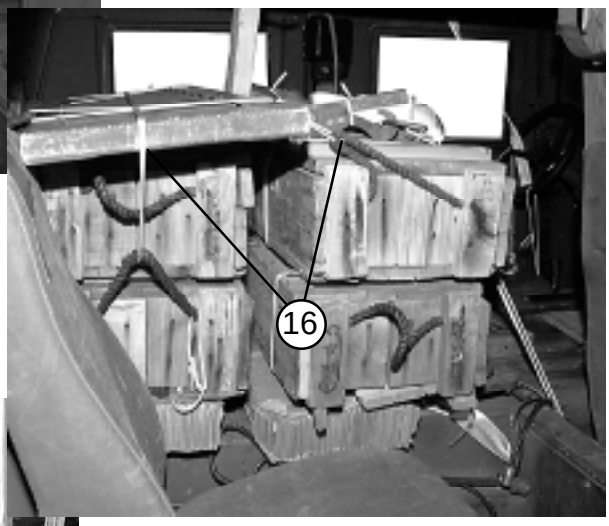

(14) Center two ammunition boxes over each of the honeycomb pieces placed in steps 12 and 13.

(15) Secure the lashings placed in steps 10 and 11 over the ammunition boxes.

(16) Tie the panel removed in step 1 over the ammunition boxes with 1/2-inch tubular nylon webbing tied to the box carrying handles.

(17) Secure the jack to the gunner's platform with 1/2-inch tubular nylon webbing.

Figure 5-6. M1025 Accompanying Load Stowed (continued)

STOWING ACCOMPANYING LOAD IN M1121 TOW CARRIER

5-7. Use the procedures shown in Figure 5-7 to stow mission and truck equipment weighing 800-2000 pounds. An 800-pound load is shown here.

NOTE: The accompanying load rigging procedures for the M1025 Armament Carrier are different from the M1121 procedures and are given in paragraph 5-6.

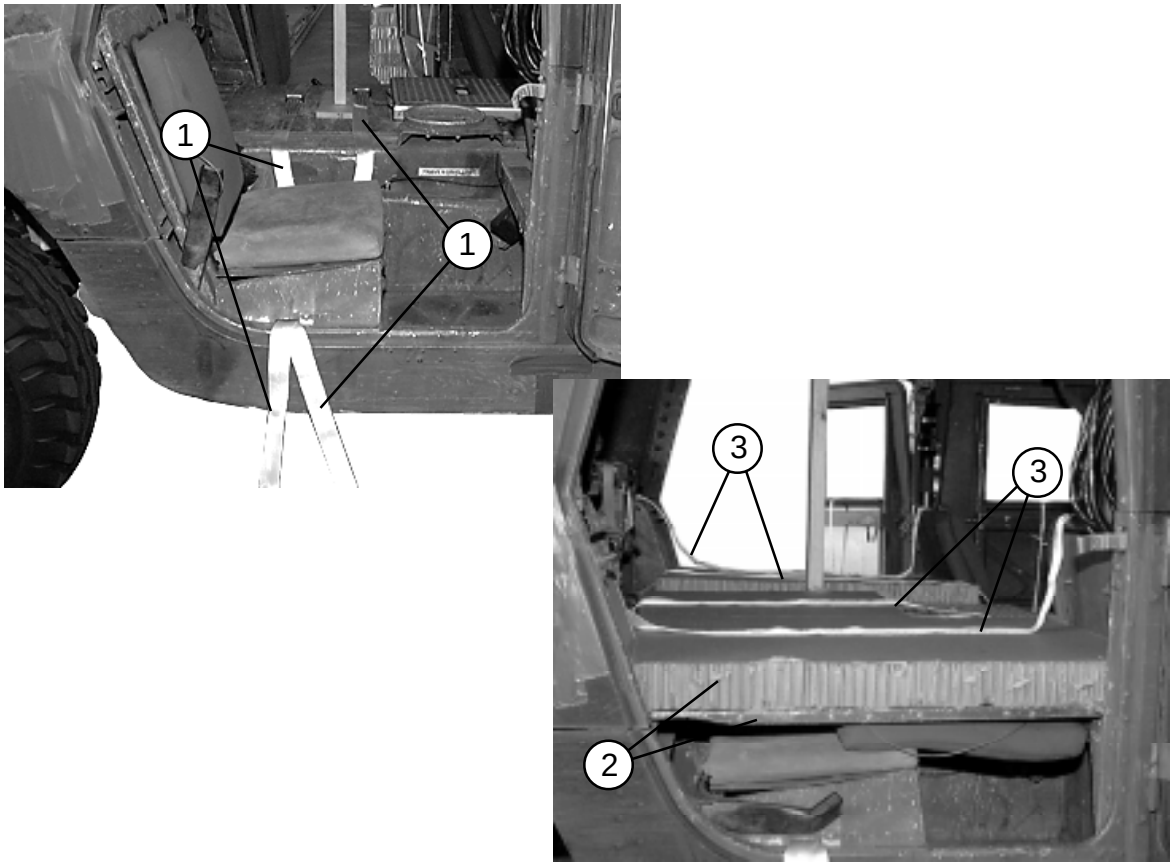

1. Center two 30-foot lashings between the rear seats about 12 inches apart. Bring the free ends of the lashings through the cutouts under the seat cushions on each side.
2. Fold the seat backs forward over the footwells. Cover the rear seating area with two pieces of honeycomb cut to fit between the front seat backs and the rear seat backs, on either side of the turret support.
3. Evenly space two 15-foot lashings lengthwise on each piece of honeycomb placed in step 2.

Figure 5-7. Accompanying Load Stowed in M1121 TOW Carrier

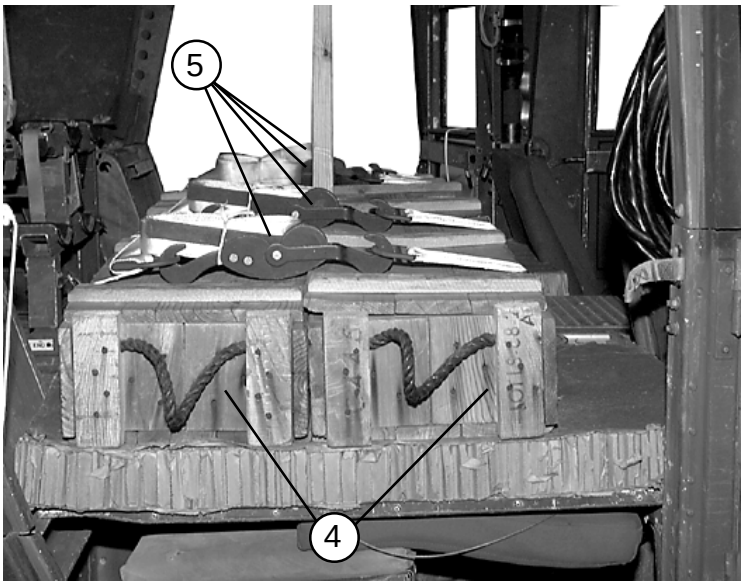

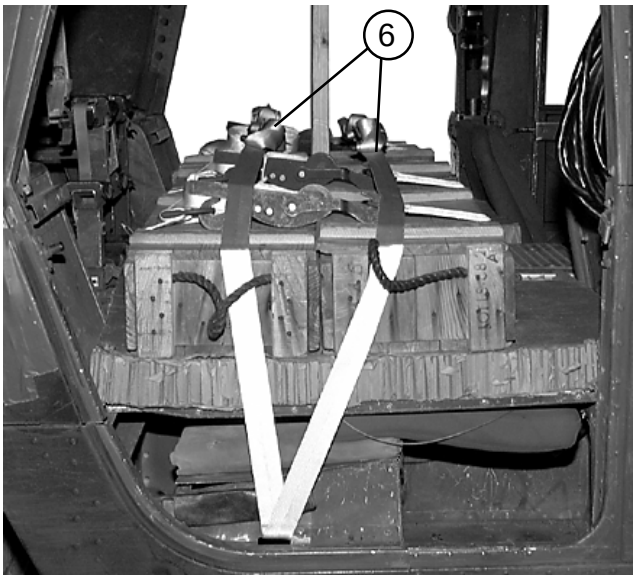

(4) Center two ammunition boxes across the width of each of the pieces of honeycomb placed in step 2.

(5) Secure each of the four lashings placed in step 3 over the ammunition boxes.

(6) Secure the lashings placed in step 1 to each other on top of the ammunition boxes.

Figure 5-7. Accompanying Load Stowed in M1121 TOW Carrier (continued)

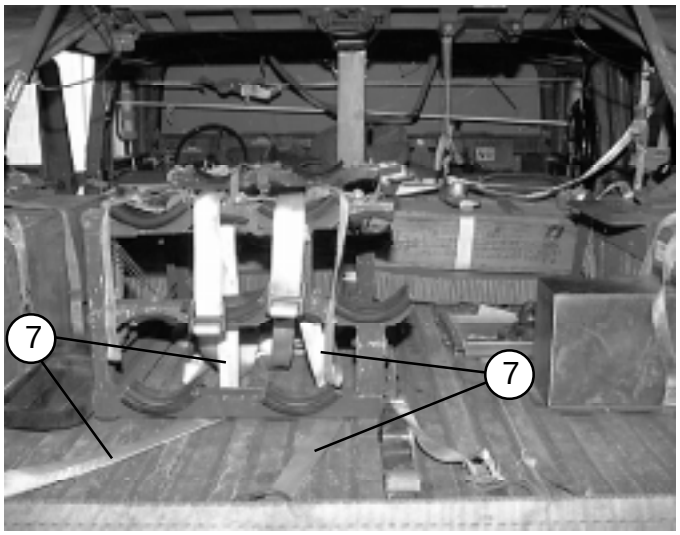

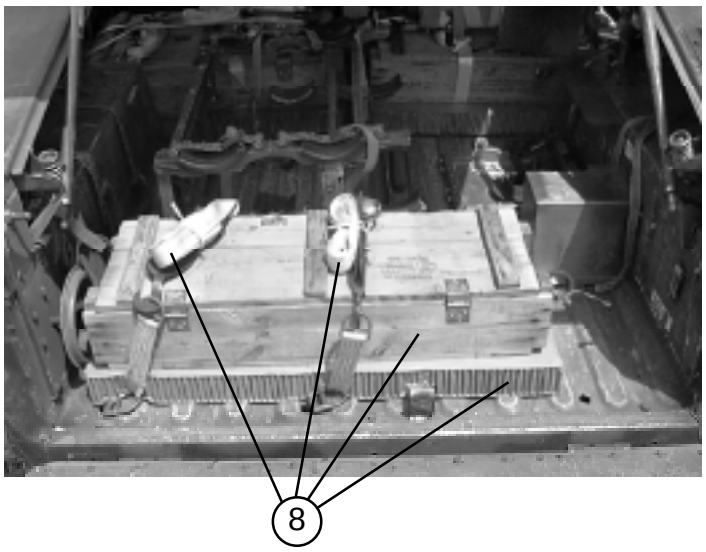

(7) Run two lashings through the two left rear cargo bed rings and under the TOW racks.

(8) Place a piece of honeycomb cut to fit and one ammunition box over the lashings. Secure the lashings on top of the box.

(9) Tie all windows open as shown in Figure 5-6, step 9.

(10) Close and secure the tailgate as shown in Figure 5-6, step 8.

Figure 5-7. Accompanying Load Stowed in M1121 TOW Carrier (continued)

PREPARING ROOF OF TOW CARRIERS

5-8. Prepare the roof of the M1025 and M1121 TOW carriers as shown in Figure 5-8.

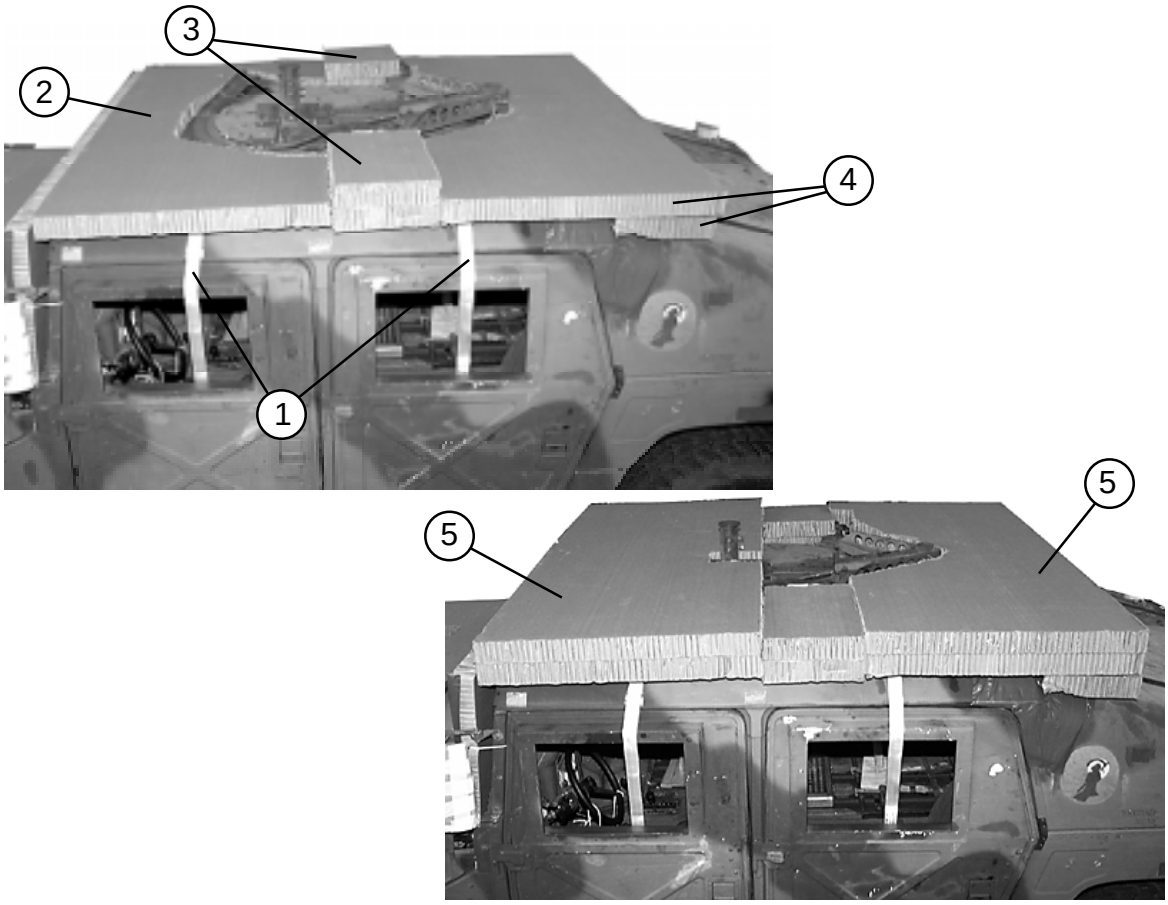

1. Place two lashings over the roof, centered on the front and rear window openings. Place the lashings so that the D-rings and running ends will be accessible from outside the truck.

2. Place a 36- by 81-inch piece of honeycomb even with the front edge of the windshield. Cut this honeycomb to allow for the turret fixtures on the roof.

3. Place two pieces of honeycomb 12 inches wide and cut to fit, to the rear of and flush with the edges of the honeycomb placed in step 2.

4. Place a 36- by 81-inch piece of honeycomb to the rear of the honeycomb placed in step 3. Cut this piece to allow for the roof turret fixtures. Crush a 12- by 81-inch piece of honeycomb to place under the wider piece so that the wider piece is level.

5. Place two additional 36- by 81-inch pieces of honeycomb flush with the pieces placed in steps 2 and 4. Cut these pieces to allow for the turret fixtures on the roof.

Figure 5-8. TOW Carrier Roof Prepared

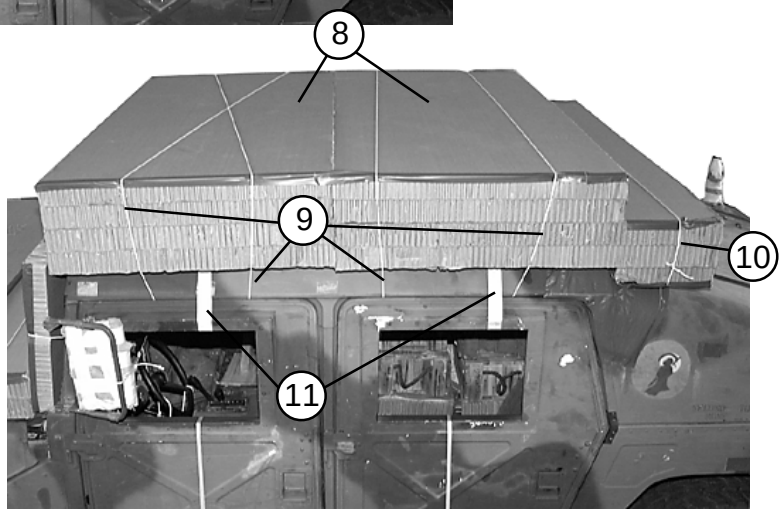

(6) Place a 36- by 81-inch piece of honeycomb flush with the pieces placed in steps 2 and 5. Cut this piece to allow for the roof turret fixtures.

(7) Place a 36- by 81-inch piece of honeycomb aligned with the piece placed in step 6. A 12-inch ledge should result at the rear.

(8) Place two 36- by 81-inch pieces of honeycomb flush with the pieces placed in steps 6 and 7. Crush this honeycomb, if necessary, to allow for the roof turret fixtures. Tape the upper outside edges of these pieces of honeycomb.

(9) Open the truck doors and tie all four layers of honeycomb together through the door openings with Type III nylon cord .

(10) Tape the lower outside edges of the 12-inch wedge piece of honeycomb placed in step 4. Tie this piece to the two layers above it with Type III nylon cord.

(11) Close the doors, and secure them shut with the lashings placed in step 1.

Figure 5-8. TOW Carrier Roof Prepared (continued)

LIFTING AND POSITIONING TRUCK AND INSTALLING OPTIONAL DRIVE-OFF AIDS

5-9. Install the lifting slings and position the truck on the honeycomb stacks as shown in Figure 4-13. Attach the optional drive-off aids to the wheels of the truck as shown in Chapter 3 of this manual. Position the truck on the platform as shown in Figure 5-9.

LASHING TRUCK

5-10. Lash the truck to the platform as shown in Figures 5-10 and 5-11.

INSTALLING SUSPENSION SLINGS AND ATTITUDE CONTROL SYSTEM

5-11. Construct and inspect the Attitude Control System (ACS) according to Chapter 3. Position the ACS and suspension slings as shown in Figure 5-12. Secure the ACS according to Chapter 3 and as shown in Figures 5-13 and 5-14. Complete the suspension slings, pad the links, and safety tie the slings as shown in Figure 5-15.

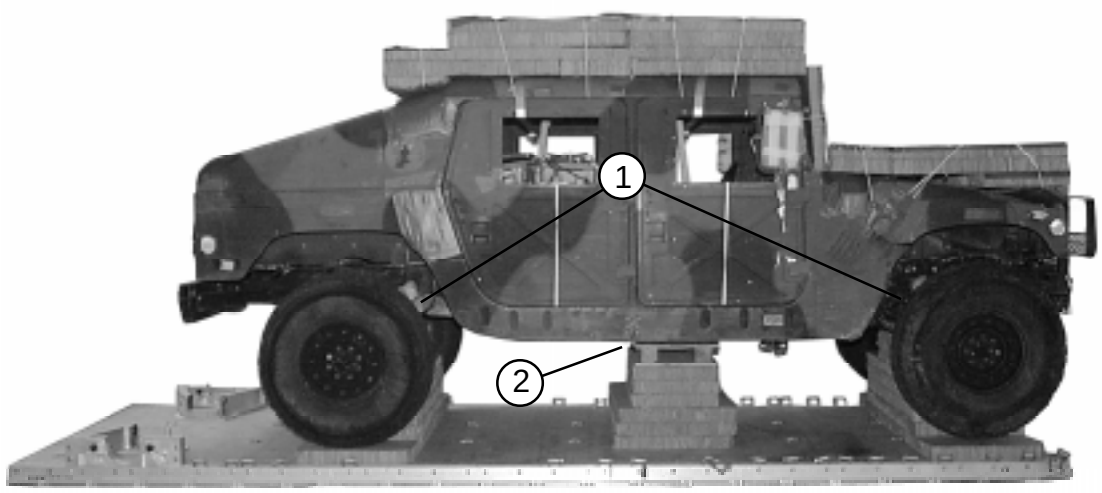

1. Be sure that the suspension cross members of the truck rest squarely on stacks 1 and 3.
2. Be sure that the frame cross member rests squarely on the 6-inch part of the honeycomb at the front of stack 2.

Figure 5-9. M1025 Armament Carrier Positioned on Platform

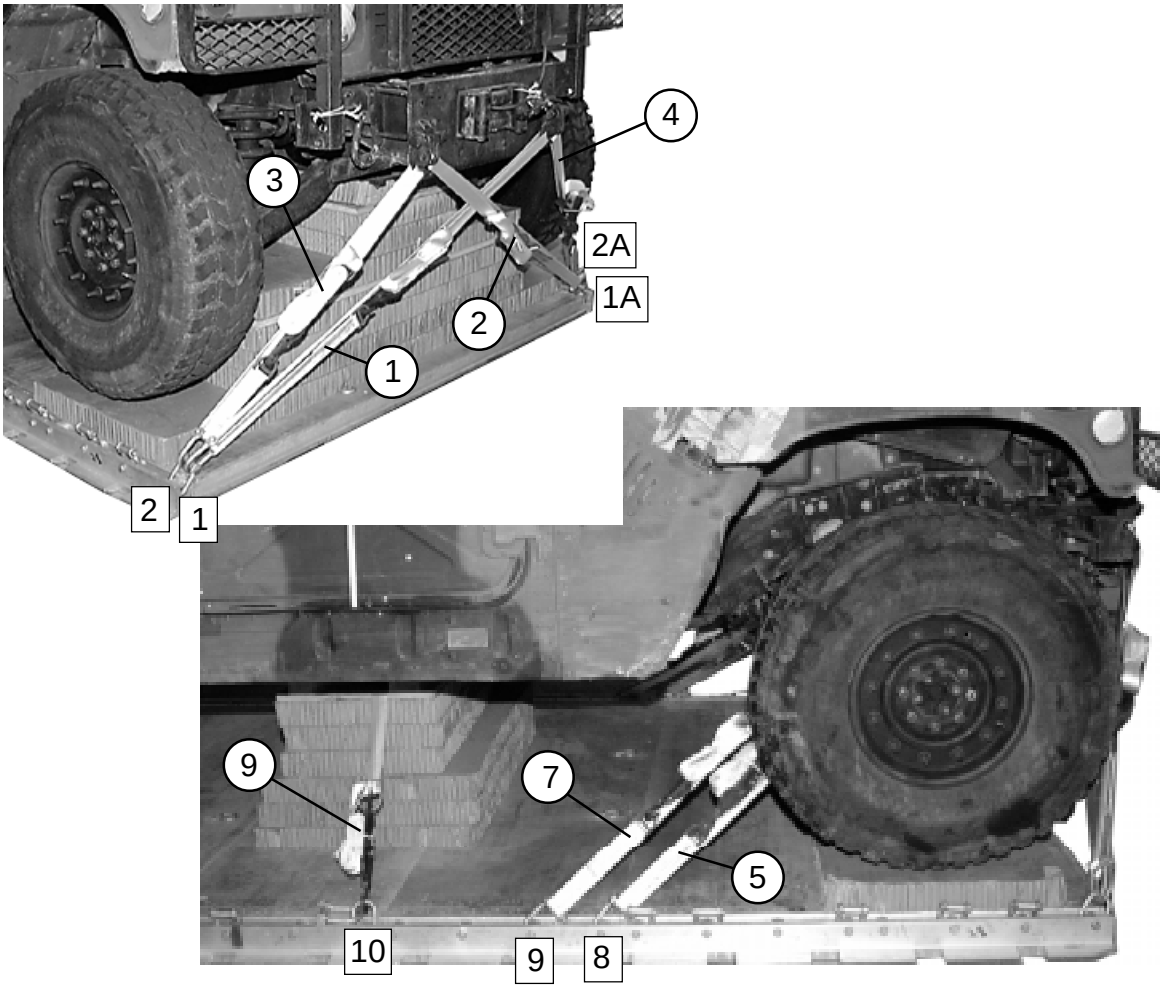

Lashing Number	**Tie-down** Clevis Number	**Instructions**
		Pass lashing:
1	1	Through left front tie-down provision.
2	1A	Through right front tie-down provision.
3	2	Through right front tie-down provision.
4	2A	Through left front tie-down provision.
5	8	Around right front lower control arm.
6	8A	Around left front lower control arm.
7	9	Through tie-down bracket behind right front coil spring.
8	9A	Through tie-down bracket behind left front coil spring.
9	10 and 10A	Pass a 15-foot lashing through clevis 10A and through its own D-ring. Pass the lashing through the hole in stack 2. Attach the lashing to clevis 10 with a load binder.

Figure 5-10. Lashings 1 Through 9 Installed

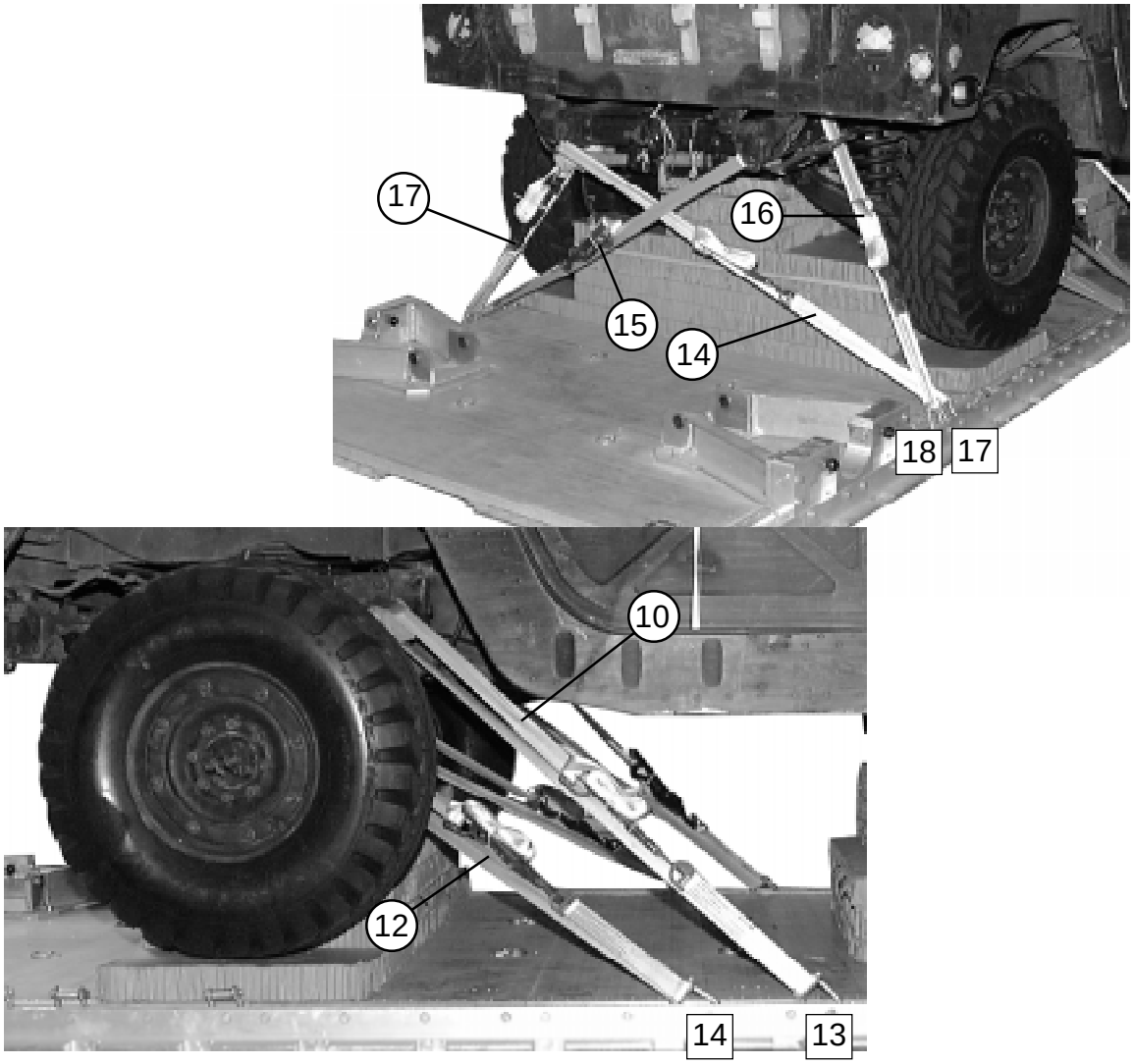

Lashing Number	**Tie-down** Clevis Number	**Instructions**
		Pass lashing:
10	13	Through tie-down bracket in front of right rear coil spring.
11	13A	Through tie-down bracket in front of left rear coil spring.
12	14	Around right rear lower control arm.
13	14A	Around left rear lower control arm.
14	17	Through left rear tie-down provision.
15	17A	Through right rear tie-down provision.
16	18	Through right rear tie-down provision behind the coil spring.
17	18A	Through left rear tie-down provision behind the coil spring.

Figure 5-11. Lashings 10 Through 17 Installed

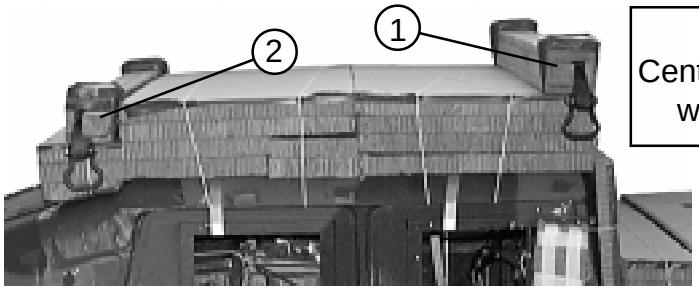

CAUTION
Center the ACS assemblies widthwise on the load.

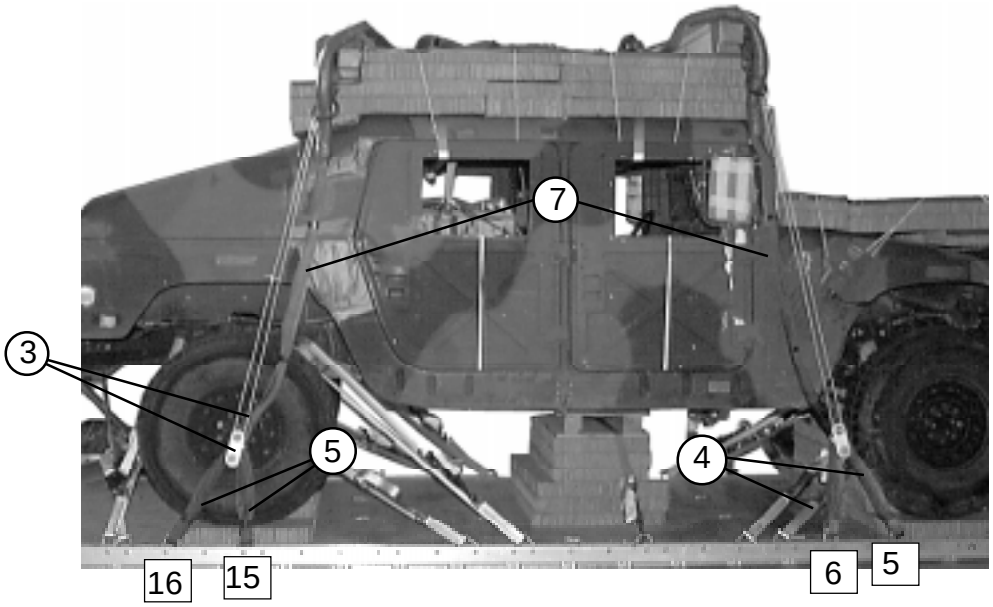

1. Center the front ACS on the roof protection honeycomb with the 4- by 4-inch piece of lumber facing the rear.
2. Center the rear ACS as far forward as possible on the ledge in the roof protection honeycomb. Face the 4- by 4-inch piece of lumber to the front.
3. Attach a 3 3/4-inch two-point link to an 11-foot (4-loop), Type XXVI nylon sling. Pass a 3-foot (4-loop) Type XXVI nylon sling through the two point link. Repeat this procedure three times.
4. Attach the ends of a 3-foot sling placed in step 3 to clevises 5 and 6.
5. Attach the ends of another of the 3-foot slings placed in step 3 to clevises 15 and 16.
6. Repeat steps 4 and 5 for clevises 5A and 6A, and for 15A and 16A (not shown).
7. Pad the 11-foot slings with felt and tape 6 inches below the ACS clevis and extending to 6 inches above the top of the ACS. Pass each suspension sling through the closest ACS clevis.
8. Safety tie the two-point links to the ACS clevises with loops of Type III nylon cord.

Figure 5-12. Front and Rear ACS Installed, and Suspension Slings Installed

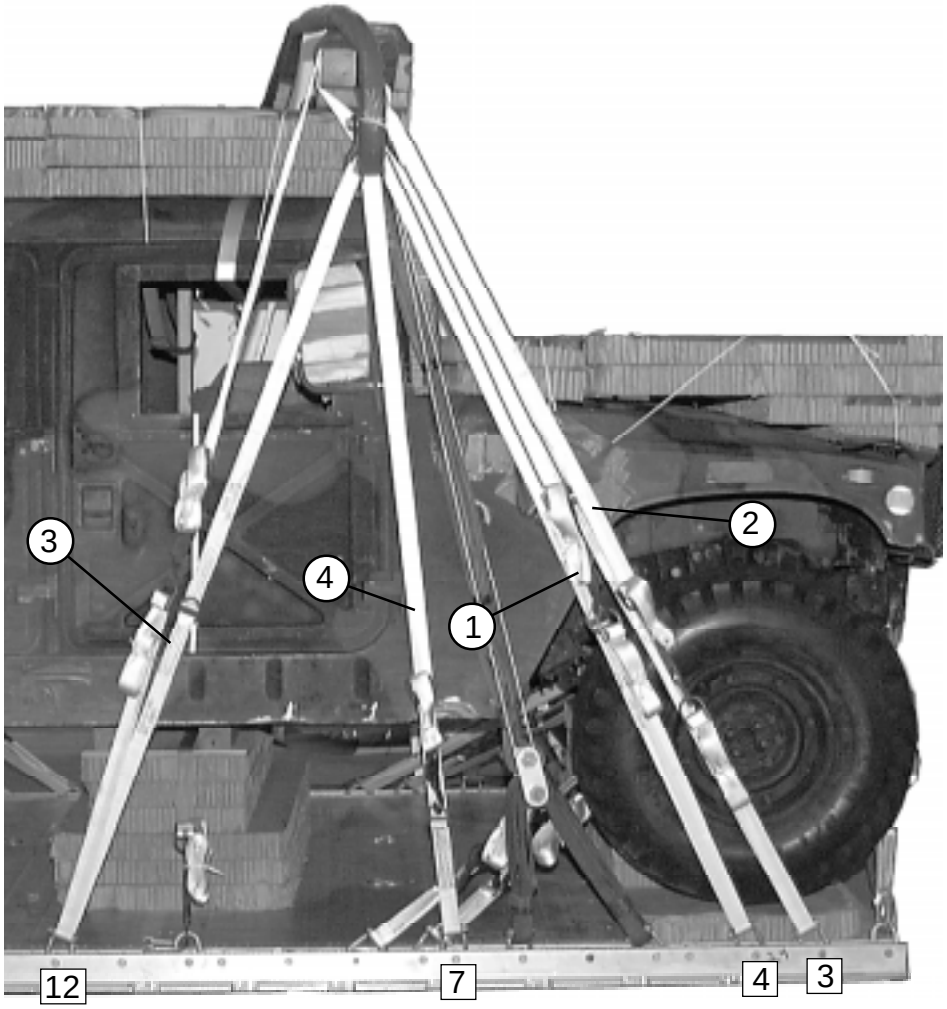

1. Run a 30-foot lashing from clevis 4, through the ACS clevis from outside to inside, rear to front, around the 4- by 4-inch piece of lumber, and back to clevis 4. Loosely secure the lashing. Repeat on the left side.

2. Repeat step 1 using clevises 3 and 3A.

3. Run a 30-foot lashing from clevis 12, through the ACS clevis from outside to inside, front to rear, around the 4- by 4-inch piece of lumber, and back to clevis 12. Loosely secure the lashing. Repeat on the left side.

4. Run a lashing from clevis 7, through the ACS clevis, and back to clevis 7. Loosely secure the lashing. Repeat on the left side.

5. Make sure the ACS is centered on the load, and tighten the load binders on the left and right at the same time. Tighten the lashings in the following order: 4 and 4A, 3 and 3A, 12 and 12A, 7 and 7A.

Figure 5-13. Front ACS Secured

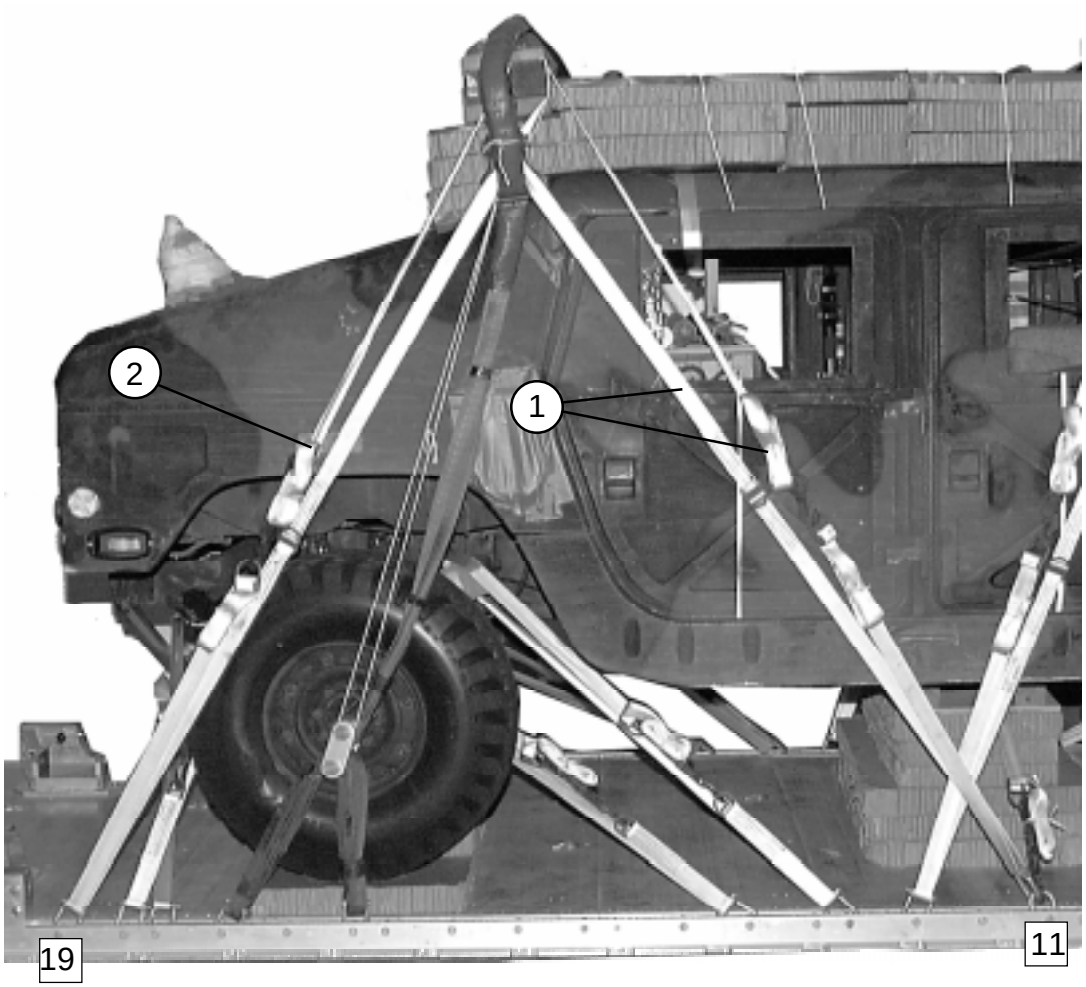

1. Run a 30-foot lashing from clevis 11, through the ACS clevis from outside to inside, rear to front, around the 4- by 4-inch piece of lumber, and back to clevis 11. Loosely secure the lashing. Repeat on the left side.

2. Run a 30-foot lashing from clevis 19, through the ACS clevis from outside to inside, front to rear, around the 4- by 4-inch piece of lumber, and back to clevis 19. Loosely secure the lashing. Repeat on the left side.

3. Make sure the ACS is centered on the load, and tighten the load binders on the left and right at the same time. Tighten the lashings in the following order: 11 and 11A, 19 and 19A.

Figure 5-14. Rear ACS Secured

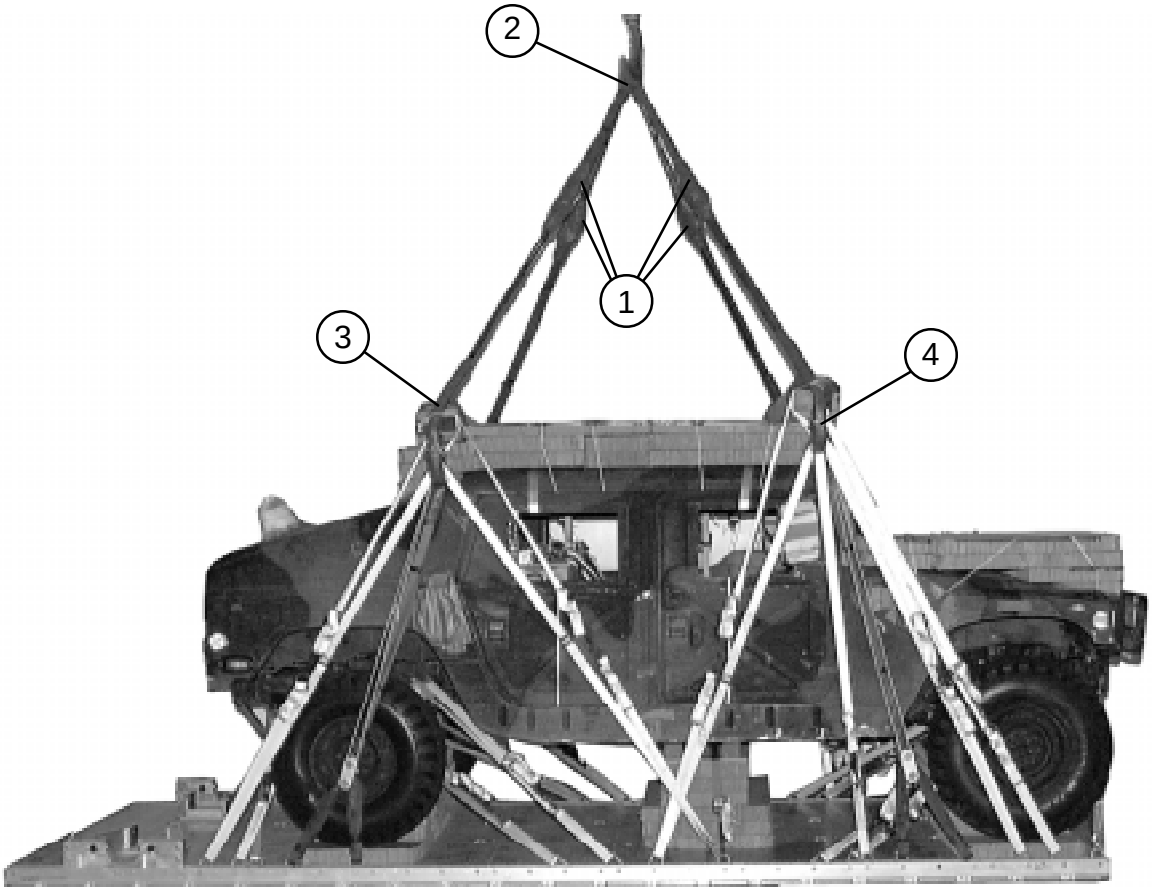

1. Attach a 3-foot (4-loop), Type XXVI nylon sling to the free end of each 11-foot sling with a 3 3/4-inch two-point link. Pad each link with felt taped in place.

2. Extend the slings upward, place them in the crane hook, and pull them taut.

3. Tie a length of Type III nylon cord around and behind the suspension sling, and around each ACS sling. See Figure 4-19 for a detailed view. Repeat for the remaining three suspension slings.

4. Tie a length of Type III nylon cord around the suspension sling, behind all lashings, and around the 4- by 4-inch piece of lumber of the ACS. See Figure 4-19 for a detailed view. Repeat for the remaining three suspension slings.

Figure 5-15. Suspension Slings Completed, Raised, Padded, and Secured

INSTALLING OUTRIGGER ASSEMBLIES

5-12. Assemble, install, and safety tie the mast and foot assemblies on the DRAS platform as shown in Chapter 3, Figures 3-33 through 3-36, steps 1 through 3.

STOWING CARGO PARACHUTES

5-13. Prepare, stow, and restrain three G-11D cargo parachutes on the hood of the truck as shown in Chapter 3, and in Figure 5-16.

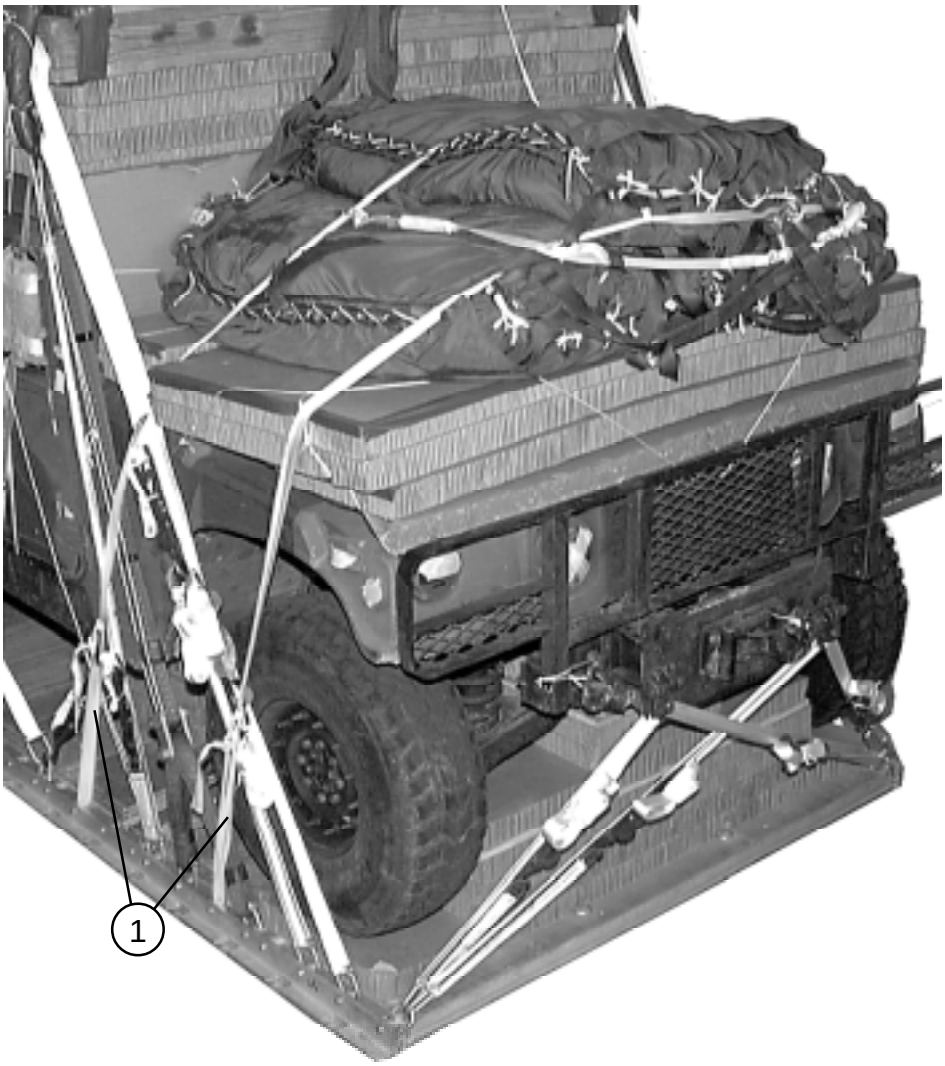

1 Restrain the parachutes with Type VIII nylon webbing to bushings 6 and 6A, and to 11 and 11A.

Figure 5-16. Cargo Parachutes Installed

STOWING DEPLOYMENT PARACHUTE

5-14. Prepare, stow, and install the deployment parachute according to Chapter 3, Section IV, and as shown in Figure 5-17.

Figure 5-17. Deployment Parachutes Installed

INSTALLING M-1 RELEASE SYSTEM

5-15. Prepare and install the M-1 parachute release system according to Chapter 3, and as shown in Figure 5-18.

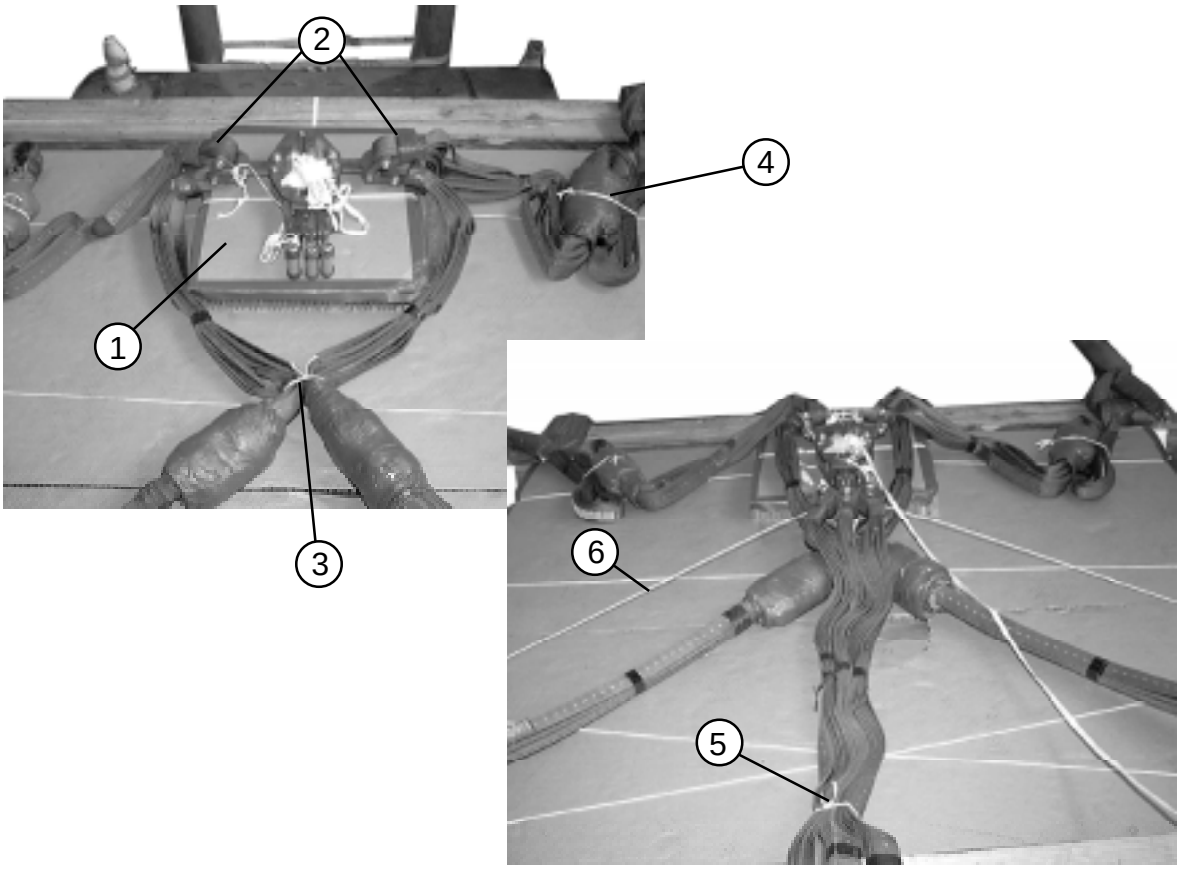

1. Tape the upper edges of a 20-inch square piece of honeycomb, and center it along the rear ACS.
2. Remove the cotton buffers from the ends of the suspension slings and attach them to the release routed as shown.
3. Secure the front suspensions slings together above the 3 3/4-inch, two-point links with one turn of Type I, 1/4-inch cotton webbing.
4. S-fold the slack in the rear suspension slings and tie them around the links with Type I, 1/4-inch cotton webbing.
5. Attach the riser extensions. Tie them in three places with Type I, 1/4-inch cotton webbing.
6. Secure the release to convenient points on the load with Type III nylon cord.

Figure 5-18. M-1 Cargo Parachute Release Installed

INSTALLING MAST RELEASE KNIVES

5-16. Install the mast release knives according to Chapter 3, Figure 3-36, steps 4 through 10 and as shown in Figure 5-19.

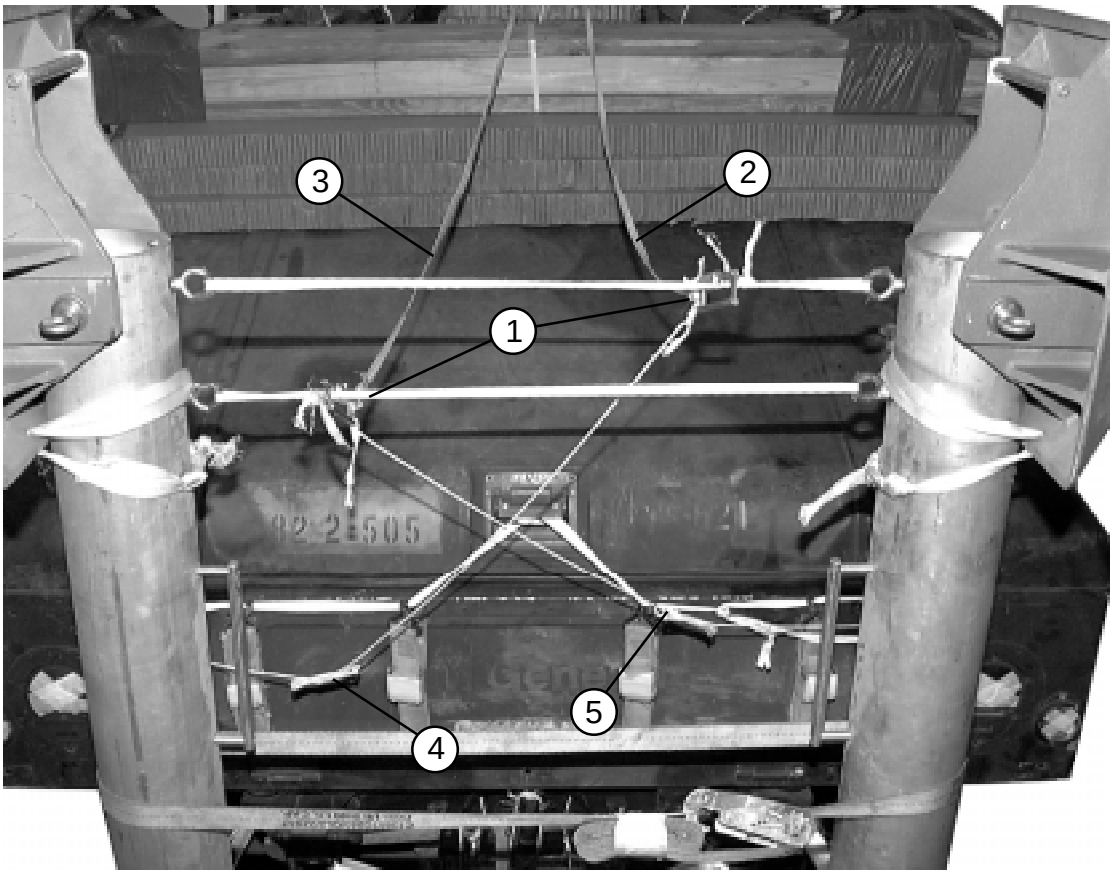

1. Install and safety tie a guillotine knife around each outrigger vertical restraint tie.
2. Tie the upper knife to the right lower suspension link of the release with a 78-inch length of 1/2-inch tubular nylon webbing.
3. Tie the lower knife to the left lower suspension link of the release with a 78-inch length of 1/2-inch tubular nylon webbing.
4. Tie the upper knife to the left tailgate sling guide with a 69-inch length of Type III nylon cord. Fold the slack in the cord and tape the folds with paper masking tape.
5. Tie the lower knife to the right tailgate sling guide with a 69-inch length of Type III nylon cord. Fold the slack in the cord and tape the folds with paper masking tape.

Figure 5-19. Mast Release Knives Installed

MARKING RIGGED LOAD

5-17. Mark the rigged load according to Chapter 3 and as shown in Figures 5-20 and 5-21.

EQUIPMENT REQUIRED

5-18. The equipment required to rig this load is given in Table 5-1.

CAUTION

Make the final rigger inspection required by Chapter 3 of this manual before the load leaves the rigging site.

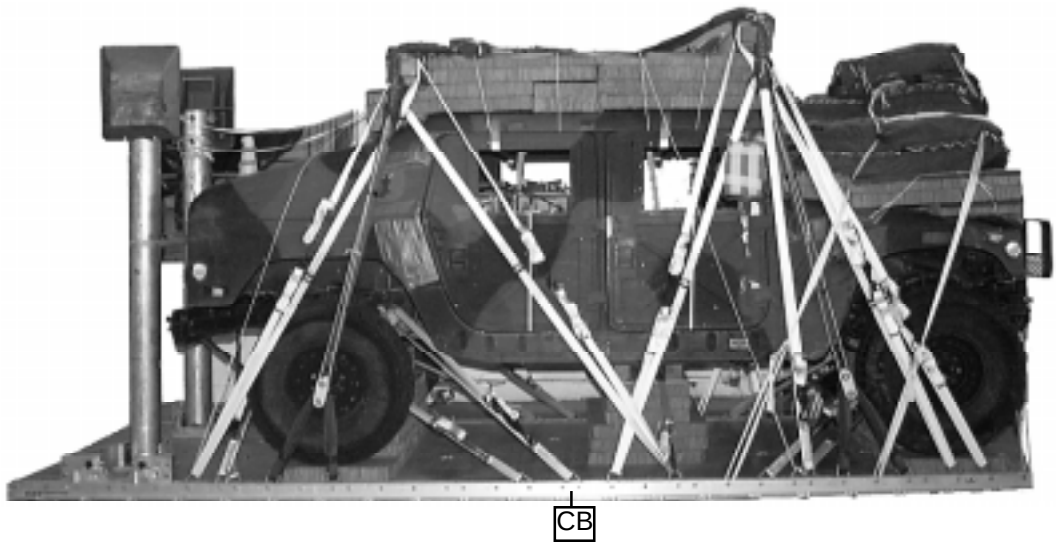

RIGGED LOAD DATA, M1025

Weight: Load shown	12,637 pounds
Maximum load allowed	12,637 pounds
Height (with three G-11D parachutes)	98 inches
Width	94 inches
Length (overall)	229 inches
Overhang: Front	13 inches
Rear	0 inches
CB (from front edge of platform)	94 inches

Figure 5-20. M1025 Armament Carrier Rigged for Dual Row Airdrop

CAUTION

Make the final rigger inspection required by Chapter 3 of this manual before the load leaves the rigging site.

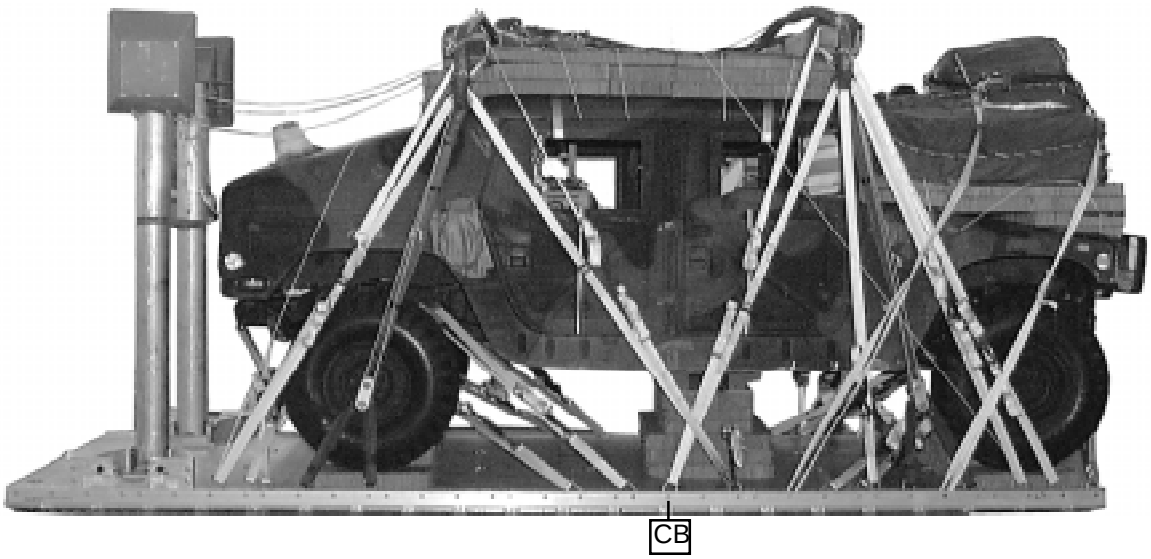

RIGGED LOAD DATA, M1121

Weight: Load shown ..... 10,455 pounds
Maximum load allowed ..... 12,637 pounds
Height (with three G-11D parachutes) ..... 98 inches
Width..... ..... 94 inches
Length (overall) ..... 224 inches
Overhang: Front ..... 8 inches
Rear .... 0 inches
CB (from front edge of platform) ..... 86 inches

Figure 5-21. M1121 TOW Carrier Rigged for Dual Row Airdrop

Table 5-1. Rigging M1025 Armament Carrier and M1121 TOW Carrier on a Dual Row Platform for Dual Row Airdrop

National Stock Number	Item	Quantity
8040-00-273-8713	Adhesive paste, 1-gal	As required
4020-00-240-2146	Cord, nylon, type III, 550-lb	As required
4030-00-090-5354	Clevis, large	1
4030-00-678-8562	Clevis, medium	4
	Link assembly:	
	Two-point, 3 3/4-in (for C-17)	9
5306-00-435-8994	Bolt, 1-in diam, 4-in long	18
5310-00-232-5165	Nut, 1-in, hexagonal	18
1670-00-003-1953	Plate, side, 3 3/4-in	18
5365-00-007-3414	Spacer, large	18
	Lumber:	
5510-00-220-6146	2- by 4-in	As required
5510-00-220-6148	2- by 6-in	As required
5510-00-220-6274	4- by 4-in	As required
5530-00-618-8073	Plywood, 3/4-in	5 sheets
	Nail, steel wire, common,	
5315-00-010-4659	8d	As required
5315-00-010-4662	12d	As required
1670-00-753-3928	Pad, energy dissipating, honeycomb, 3- by 36- by 96-in	16 sheets
000-00-000-0000	Static line assembly release away	1
	Parachute:	
	Cargo:	
1670-01-016-7481	G-11D	3
	Cargo extraction:	
1670-00-040-8135	28-foot	1
	Platform, Dual Row, 18-foot	1
1670-01-485-1656	Panel assembly, main	1
1670-01-485-1654	Rail, DRAS	2
1670-01-486-1342	Roller Pad, DRAS	2
1670-01-162-2372	Clevis assembly	38
1670-01-097-8816	Release, cargo parachute, M-1	1

National Stock Number	Item	Quantity
	Sling, cargo airdrop	
	For suspension:	
1670-01-062-6310	11-ft (4-loop), type XXVI nylon webbing	4
1670-01-062-6306	3-ft (4-loop), type XXVI nylon webbing	8
	For deployment:	
1670-01-062-6306	3-ft (4-loop), type XXVI nylon webbing	1
	For riser extention:	
1670-01-062-6313	60-ft (3-loop), type XXVI nylon webbing	2
	For ACS:	
1670-01-063-7761	16-ft (2-loop), type XXVI nylon webbing	2
	For lifting:	
1670-01-062-6304	9-ft (2-loop), type XXVI nylon webbing	2
1670-01-062-6303	12-ft (2-loop), type XXVI nylon webbing	2
1670-00-040-8219	Strap, parachute release, multicut	2
1670-00-937-0271	Knife release,cargo (guillotine)	2
1670-01-487-5464	Outrigger assembly	2
7510-00-266-5016	Tape, adhesive, 2-in	As required
1670-00-937-0271	Tie-down assembly, 15-ft	51
1670-00-725-1437	Tie-down, Cargo, Aircraft, (CGU-1B)	5
	Webbing:	
8305-00-268-2411	Cotton, 1/4-in, type I	As required
	Nylon:	
8305-00-082-5752	Tubular, 1/2-in	As required
8305-00-263-3591	Type VIII	8 yds

SECTION II - RIGGING M1114 UP-ARMORED ARMAMENT CARRIER FOR DRAS

DESCRIPTION OF LOAD

5-19. The M1114 HMMWV- series truck has a heavy-duty suspension and additional armor in the sides, door and floor. The truck is rigged on a Dual Row Airdrop System (DRAS) platform with four G-11D parachutes. The vehicle weighs 9,800 pounds and is 197 inches long. The M1114 is 86 inches wide and the reduced height is 74 inches.

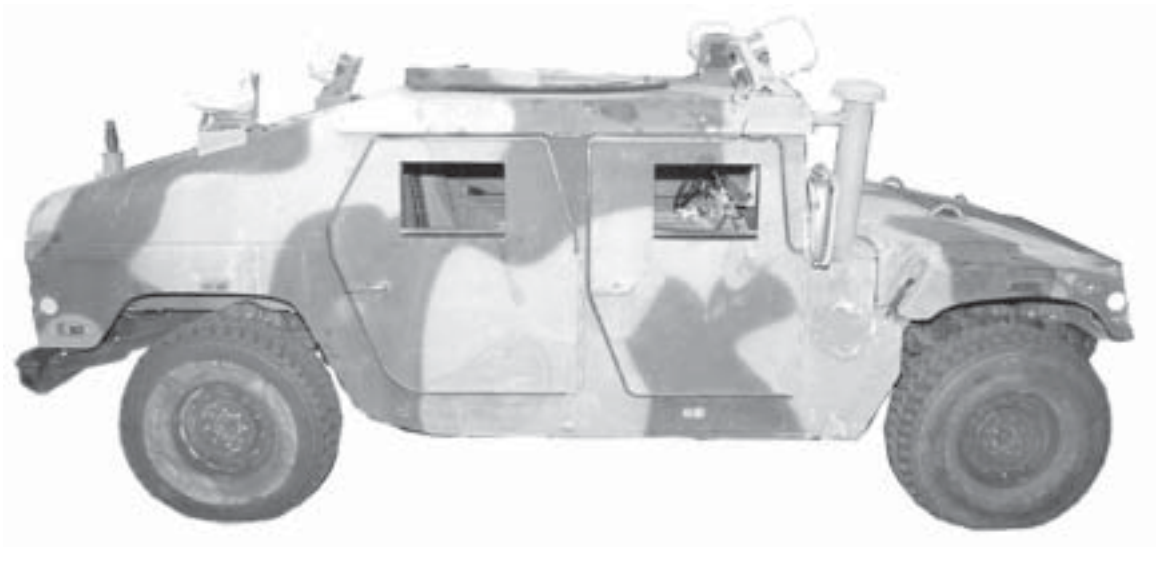

Figure 5-22. M1114 Up-Armored Armament Carrier

PREPARING PLATFORM

5-20. Inspect, or assemble and inspect, a DRAS platform with outrigger assemblies, outrigger platform support weldments, and link assemblies according to TM 10-1670-268-20&P/TO 13C7-52-22, FM 4-20.105/ TO 13C7-1-51 Chapter 3 and as shown in Figure 5-23.

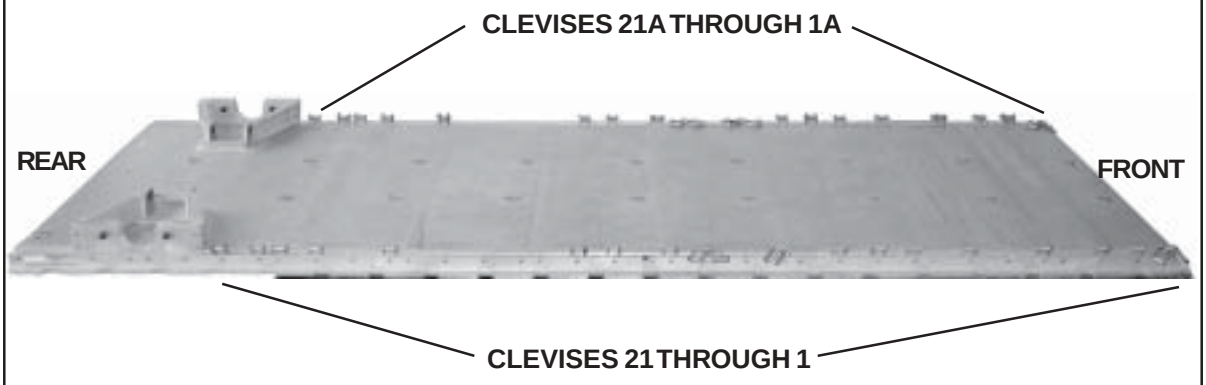

Steps:

1. Starting at the front of each platform side rail, install clevises on the bushings bolted to holes 1 (tripled), 2, 3, 5, 7, 9, 10, 11, 13 (doubled), 15 (tripled), 16, 18, 19, 25, 27, 28, 29, and 30.
2. Starting at the front of the platform side rail, number the clevises 1 through 21 on the right side and from 1A through 21A on the left side.
3. Label the panel tie-down rings A and B from right to left. Number the panel tiedown rings starting with the first panel from front to rear beginning with 1.

Figure 5-23. Platform Prepared

BUILDING AND PLACING HONEYCOMB STACKS

5-21. Build the honeycomb stacks as described in Figure 5-24 through 5-26. Position the stacks as shown in Figure 5-27.

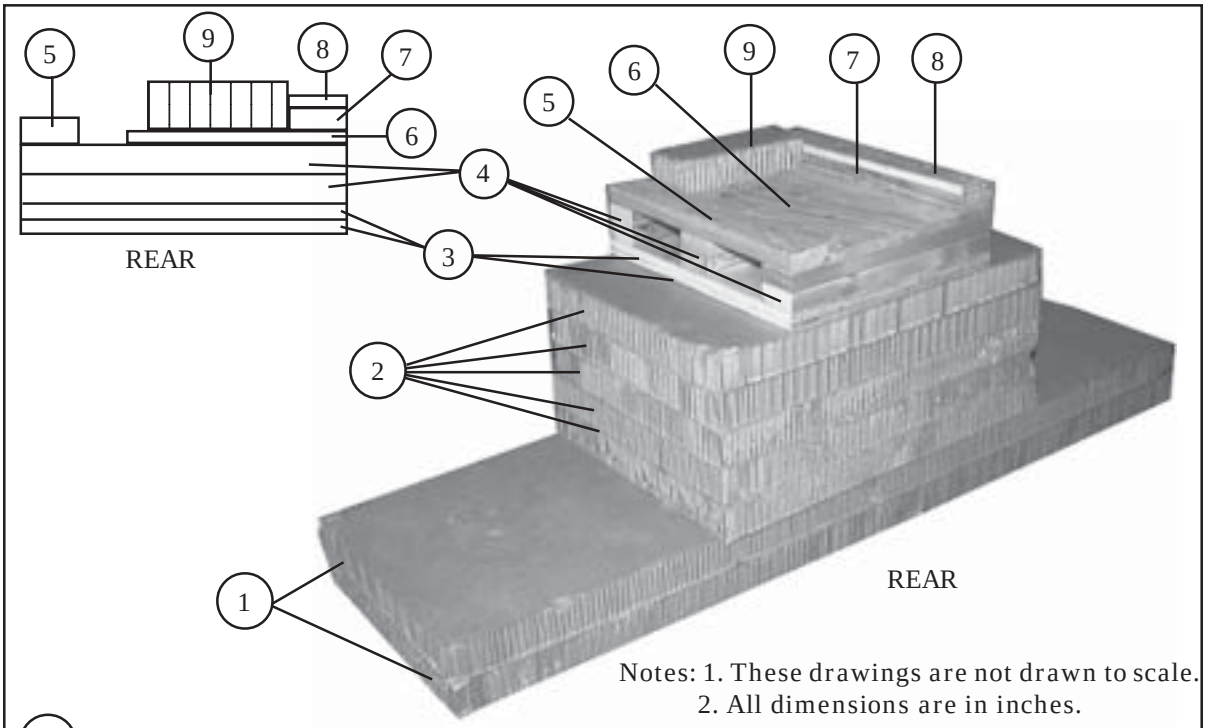

Notes: 1. These drawings are not drawn to scale.
2. All dimensions are in inches.

1. Glue two 80- by 24-inch pieces of honeycomb to form a base.
2. Center and glue five 35- by 24-inch pieces of honeycomb on top of the base.
3. Glue two 21- by 24-inch pieces of 3/4-inch plywood to each other.
4. Position and nail six pieces of 2- by 4- by 21-inch lumber in stacks of two on the plywood from step 3. Position one stack flush along the front center and rear edges.
5. Nail a piece of 2- by 4- by 24-inch lumber flush along the left side.
6. Nail a 17- inch by 24- inch piece of 3/4-inch plywood flush with the right side.
7. Nail a piece of 2- by 4- by 24-inch lumber flush with the right edge of the plywood placed in step 6 above.
8. Nail a 3 1/2- by 24-inch piece of 3/4-inch plywood flush over the lumber placed in step 7 above. Glue and center wood stack section on top of honeycomb base in step 2.
9. Glue a 13- by 5-inch piece of honeycomb along the front edge of the plywood flush against the plywood and lumber placed in steps 7 and 8 above.

Figure 5 -24. Honeycomb Stack 1 Prepared

Notes: 1. These drawings are not drawn to scale.
2. All dimensions are in inches.

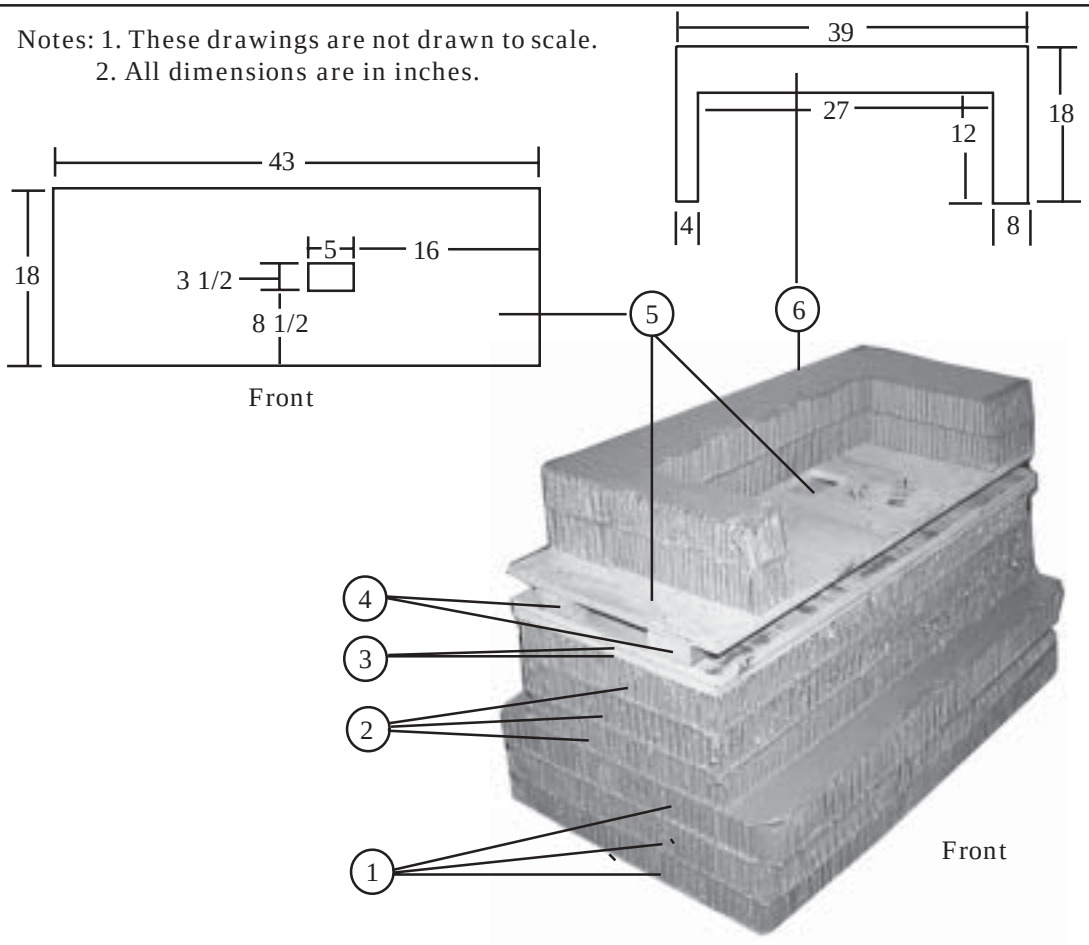

1. Glue three 43- by 26-inch pieces of honeycomb together to form a base.
2. Center and glue three 43- by 18-inch pieces of honeycomb on the base.
3. Nail two 43- by 18-inch pieces of 3/4-inch plywood flush together.
4. Nail a piece of 2- by 4- by 43-inch lumber, parallel to each long side, and 3 inches from each long edge of the plywood.
5. Make a 3 1/2- by 5-inch cutout, as shown, in a 18- by 43- by 3/4-inch piece of plywood. Nail the plywood to the lumber and flush with the bottom layers of plywood. Glue the wood section of the stack flush on the honeycomb placed in step 2 above.
6. Make the cutout as shown in two 39- by 18-inch pieces of honeycomb. Glue and center the honeycomb flush with the left edge of the plywood, with the cutout facing the front of the stack.

Figure 5-25. Honeycomb Stack 2 Prepared

Notes: 1. These drawings are not drawn to scale.
2. All dimensions are in inches.

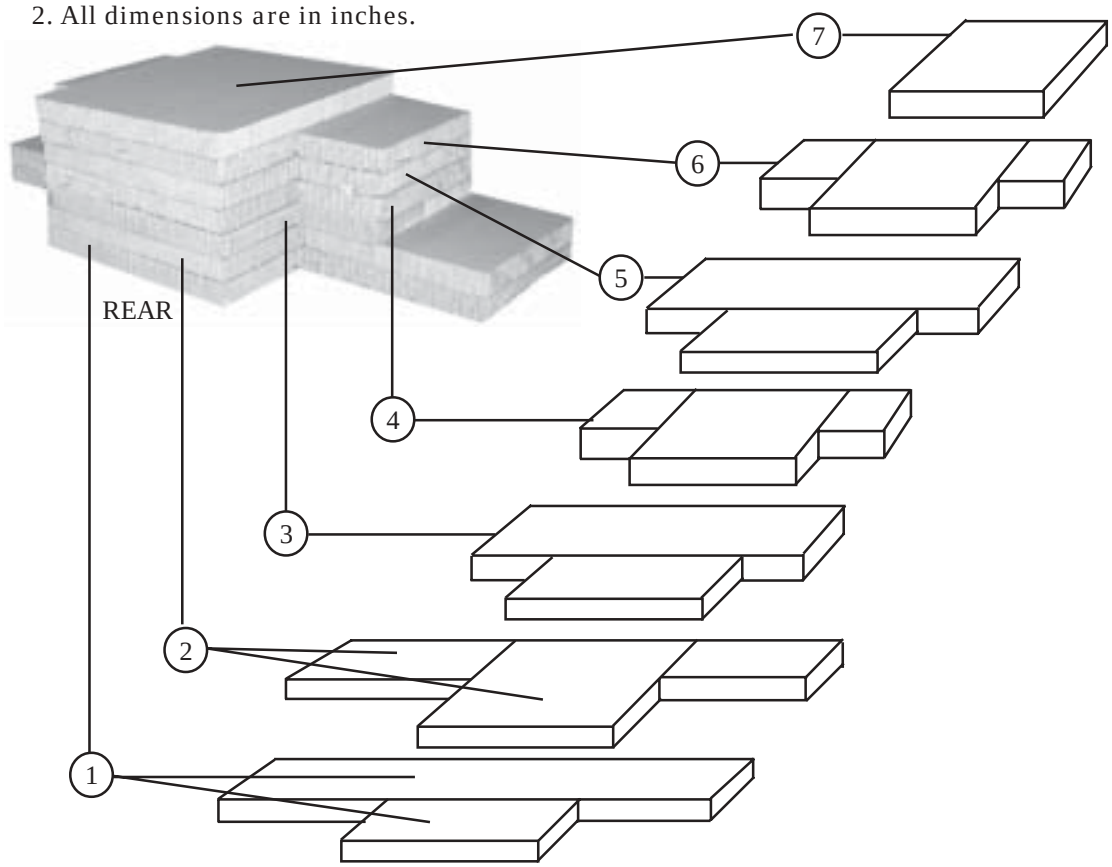

1. Center a 30- by 14-inch piece of honeycomb along the rear edge of an 80- by 24-inch piece of honeycomb to form a base.

2. Center a 30- by 38-inch piece of honeycomb flush with the front and rear edge of the first honeycomb layer in step 1. Place a 25- by 24-inch piece of honeycomb along each side of the 30- by 38-inch piece of honeycomb flush with the front edge.

3. Center a 54- by 24-inch piece of honeycomb flush with the front edge of the second honeycomb layer in step 2 and place a 30-inch by 14-inch piece of honeycomb along the rear edge.

4. Center a 30- by 38-inch piece of honeycomb flush with the rear edge of the third honeycomb layer in step 3. Place a 12- by 24-inch piece of honeycomb along each side of the 30- by 38-inch piece of honeycomb. Align with the rear edge of this layer.

5. Make this layer as shown in step 3 above and center it over the fourth honeycomb layer.

6. Make this layer as shown in step 4 above and center it over the fifth honeycomb layer.

7. Center a 30- by 38-inch piece of honeycomb over the sixth honeycomb layer.

Figure 5-26. Honeycomb Stack 3 Prepared

Notes: 1. These drawings are not drawn to scale.
2. All dimensions are in inches.

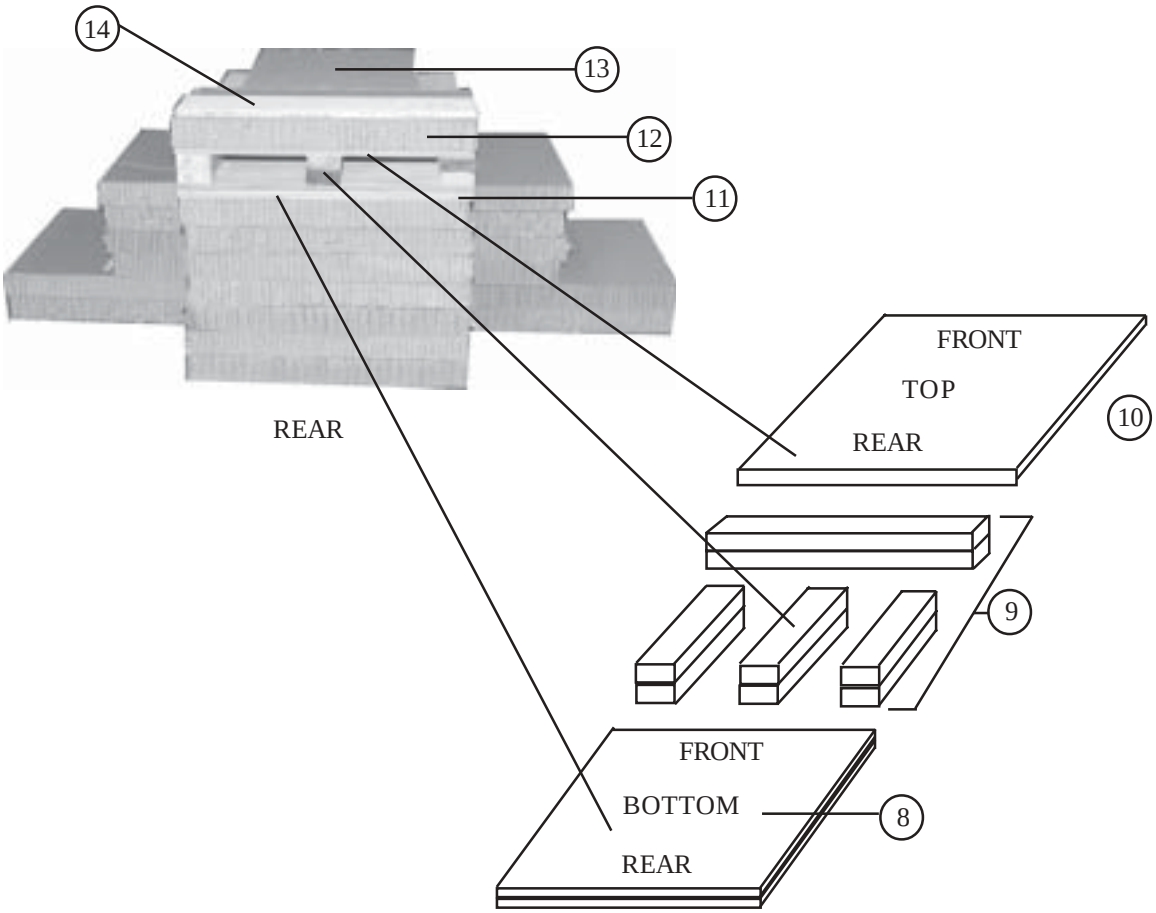

8 Glue two pieces of 30- by 38- by 3/4-inch plywood to form a base for the wood stack.

9 Position and nail eight pieces of 2- by 4- by 30-inch lumber in pairs on top of the plywood in step 8. Place one pair flush with left side, one pair flush with right side and one pair in the center. Place the fourth pair flush with the rear and sides.

10 Place a 30- by 38- by 3/4-inch piece of plywood on top of the 2- by 4-inch stacks of lumber in step 9 and nail to the wood stack.

11 Glue and center wood stack from steps 8, 9, and 10 on the seventh layer of honeycomb.

12 Glue a 30- by 14-inch piece of honeycomb flush along the rear edge as shown.

13 Center the 20 inch side of a 20- by 24-inch piece of honeycomb along the front edge of the piece of honeycomb placed in step 10.

14 Glue a 20- by 6- by 3/4-inch piece of plywood 1 inch from the rear edge of the stack.

Figure 5-26. Honeycomb Stack 3 Prepared (Continued)

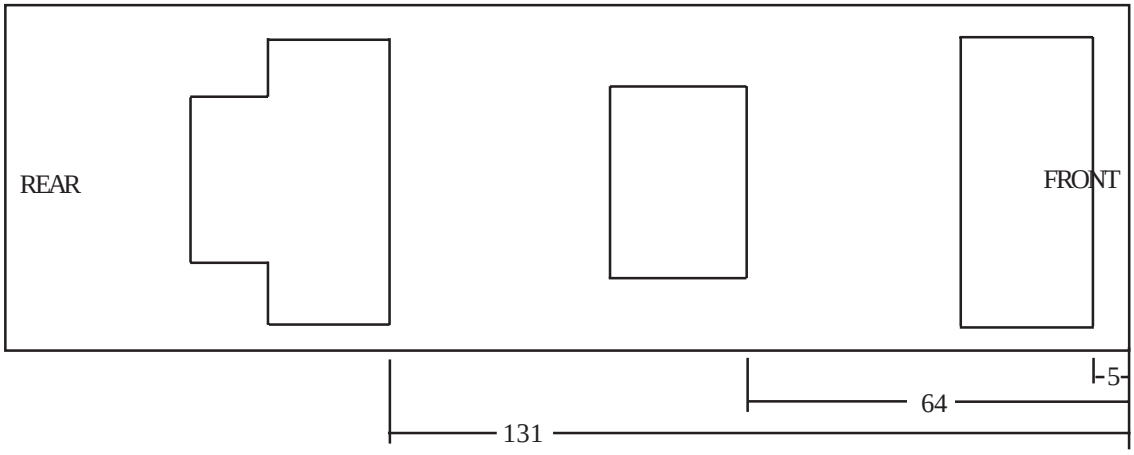

Notes: 1. These drawings are not drawn to scale.
2. All dimensions are in inches.

1. Position the front edge of stack one 5 inches from the front edge of the platform and centered.

2. Position the front edge of stack two 64 inches from the front edge of the platform and centered.

3. Position the front edge of stack three 131 inches from the front edge of the platform and centered.

Figure 5-27. Honeycomb Positioned on Platform

PREPARING THE TRUCK

5-22. Prepare the truck as described below.

a. Prepare the fuel tank and hazardous equipment in accordance with AFMAN 24-204(I)/TM 38-250, and paragraphs 4-5 a and b, and Figures 4-5 and 4-6.

> **CAUTION**
> A full fuel tank does not allow for expansion and is a danger to aircrew and aircraft

b. Prepare the inside of the cab as described in Figure 5-28.

c. Prepare the body of the truck as described in Figure 5-29.

d. Prepare the underside of the truck as described in Figure 5-30.

e. Prepare the hood and windshield of the truck as described in Figure 5-31.

f. Prepare the passenger compartment as described in Figure 5-32.

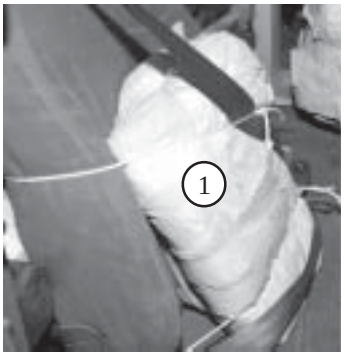

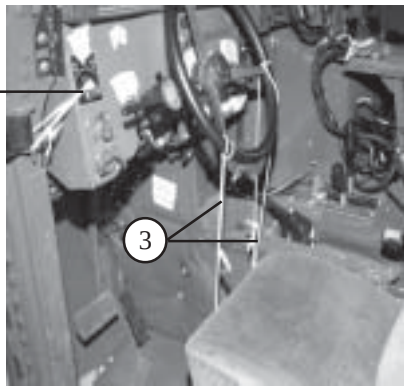

(1) Remove the side view mirrors and wrap with cellulose wadding and tape. Secure them to the front passenger seat with type III nylon cord. Fasten the seat belt around the padded mirrors.

(2) Tie the engine start switch in the engine stop position with type I, 1/4-inch cotton webbing.

(3) Tie the steering wheel to two places in the seat frame with two lengths of type III nylon cord.

Figure 5-28. Inside of Cab Prepared

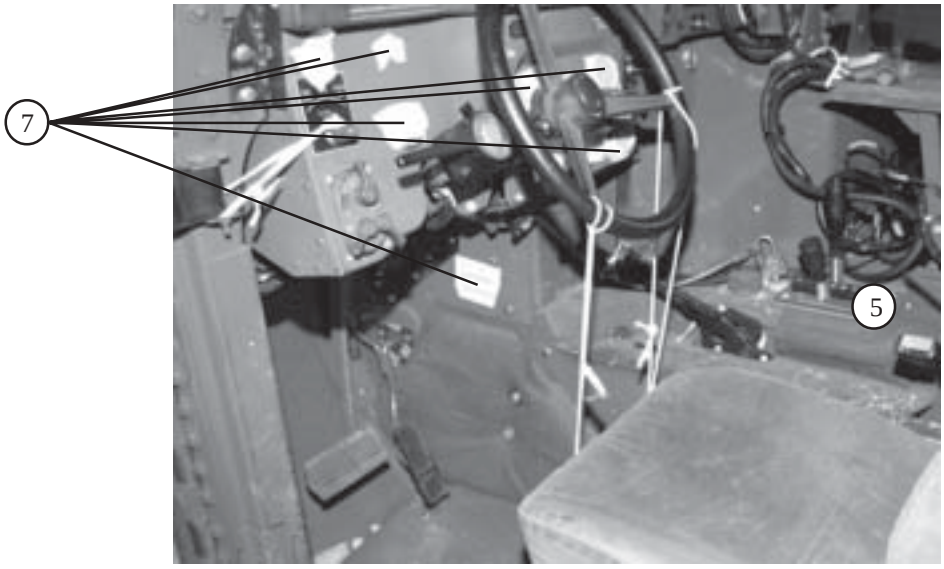

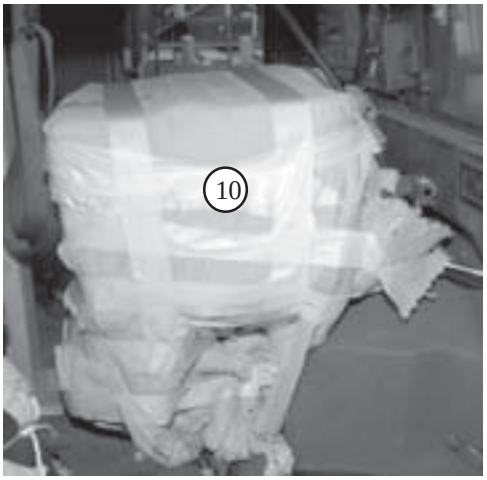

4 Tie the emergency brake, in the off position, with type III nylon cord. (not shown)

5 Place the transmission and transfer case shift levers in the neutral position.

6 Tie the fire extinguisher in place with type III nylon cord. (not shown)

7 Tape all lights, reflectors and gauges with 2-inch masking tape.

8 Secure the communications equipment in its mounts with chains and padlocks. (not shown)

9 Tie any other equipment to its mount with 1 inch tubular nylon. (not shown)

10 Pad the front of the radio equipment with cellulose wadding and tape in place. Pad the radio handset with cellulose wadding and tie the handset to its mount with type III nylon cord. (not shown)

Figure 5-28. Inside of Cab Prepared (Continued)

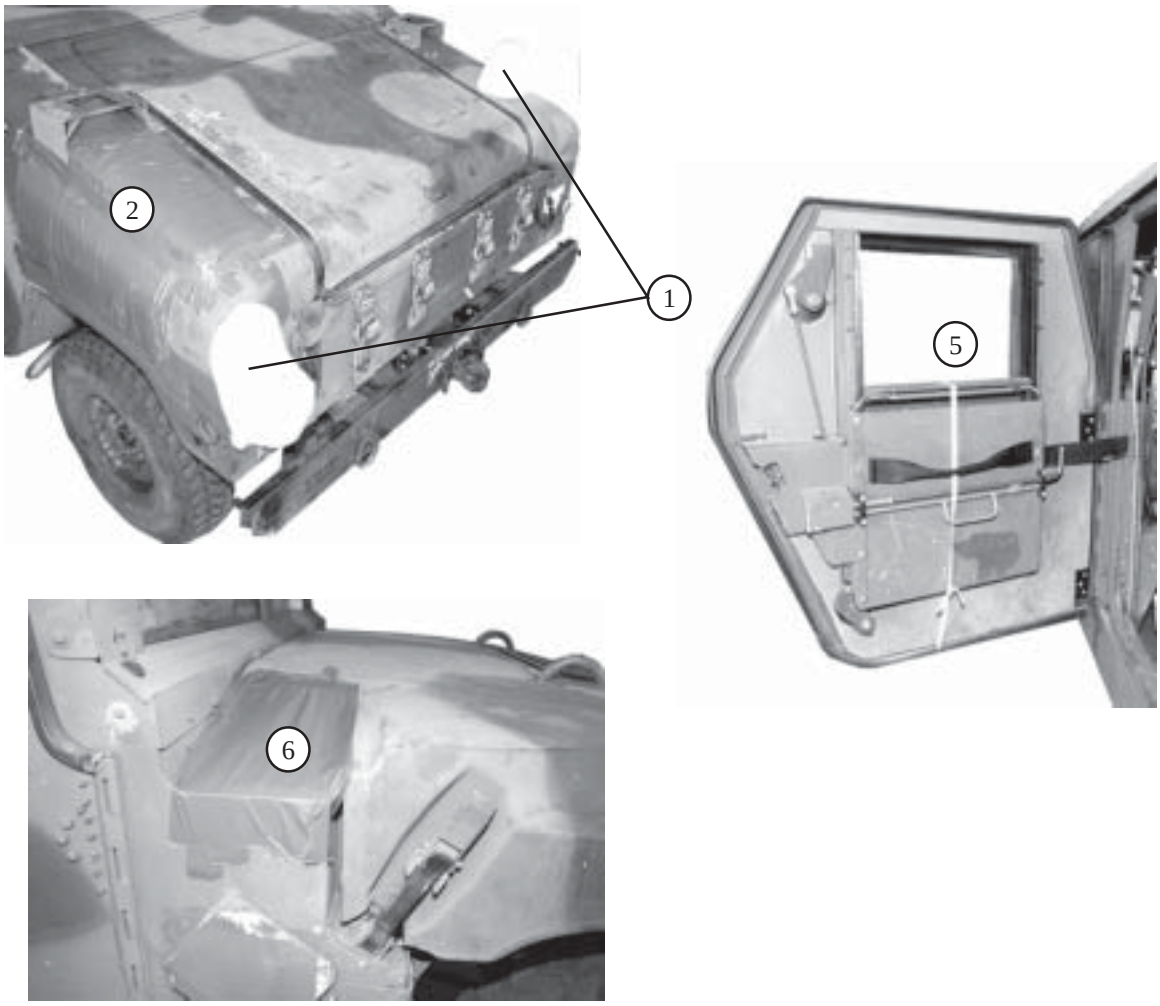

1. Remove the antennae and pad the antenna mounts with cellulose wadding and tape in place. Secure the antennae in a convenient place inside the vehicle. (not shown)
2. Pad the air vents with felt and tape in place.
3. Remove the four Light Vehicle Obscuration Smoke System (LVOSS) units from the roof corners. Pad the brackets with felt and cellulose wadding (not shown). Set the LVOSS units aside for later stowage procedures.
4. Tape all lights and reflectors. (not shown)
5. Lower all windows. Tie them in the lowered position with 1/2-inch tubular nylon.
6. Remove the breather cap and fording stack and set aside for later stowage procedures. Place a layer of felt over the intake hole and tape the felt in place.

Figure 5-29. Body of Truck Prepared

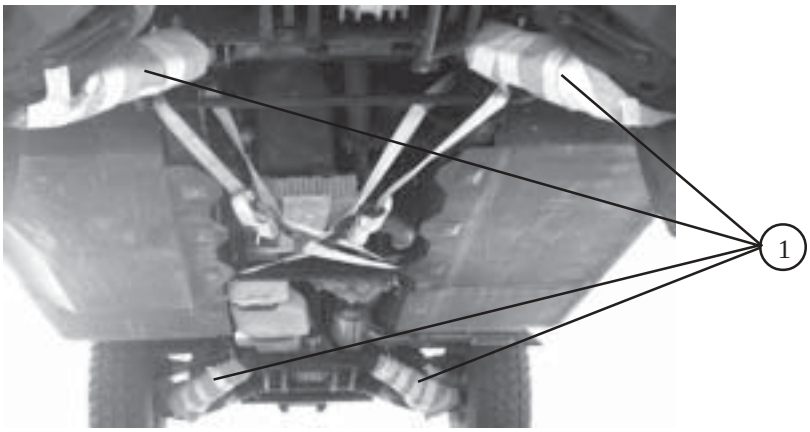

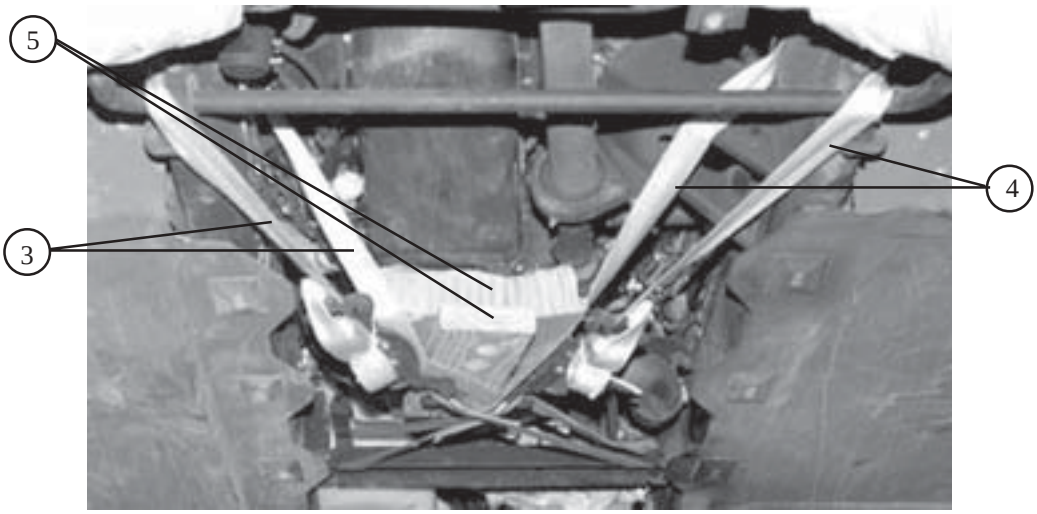

1. Pad the lower control arms at the front and rear of the truck with cellulose wadding. Tape in place.

2. Cut a 12- by 12-inch piece of honeycomb and a 16 inch length of 2- by 6- inch lumber. (not shown)

3. Route a 15-foot lashing around the right side frame member and to the front side of the stabilizer bar. Route the free end of the lashing around the radius rod on the left side of the cross member in front of the fuel tank. Do not tighten lashing at this time.

4. Route a second 15-foot lashing around the left side frame member to the front side of the stabilizer bar. Route the free end of the lashing around the radius rod on the right side of the cross member in front of the fuel tank. Do not tighten lashing at this time.

5. Place the honeycomb and lumber cut in step 2 under the oil pan. Tighten and secure both lashings over the honeycomb and lumber. Separate the load binders so they do not interfere with each other.

Figure 5-30. Underside of Truck Prepared

NOTES 1. Drawing is not drawn to scale.
2. All dimensions are given in inches.

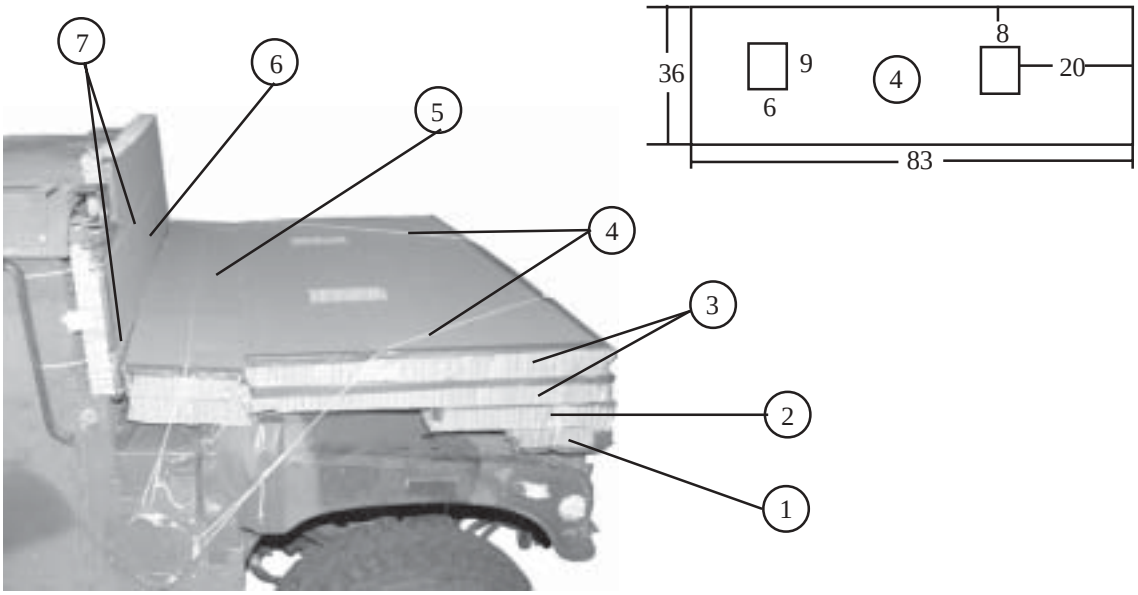

1. Cut a 10- by 80-inch piece of honeycomb. Tape the 10 inch side on the bottom of both ends. Place the honeycomb flush on the front end of the hood.

2. Cut an 18- by 80-inch piece of honeycomb. Position on top of and flush with the 10- by 80-inch piece of honeycomb. Tape the top of the 18 inch sides. Tie the two pieces of honeycomb together with a length of type III nylon cord around the 80 inch length.

3. Place two 36- by 83-inch pieces of honeycomb, with the cutouts as shown, on top of the previously positioned honeycomb and flush with the front. Tape the 36 inch sides on the top piece of honeycomb.

4. Secure the 36- by 83-inch pieces of honeycomb with type III nylon cord.

5. Cut two 12- by 83-inch pieces of honeycomb and position them behind the honeycomb positioned in step 5. Tape the top outside edges. Secure the honeycomb to the left and right vent protector.

6. Cut a 21- by 83-inch piece of honeycomb. Make a 6- by 12-inch cut out on the right front top of the honeycomb for the breather cap and fording stack brace. Tape the outside edges and position the honeycomb in front of the windshield.

7. Secure the honeycomb with two lengths of type III nylon cord around the honeycomb and inside the cab.

8. Tape the hood latches with 2-inch adhesive tape. (not shown)

Figure 5-31. Hood and Windshield Prepared

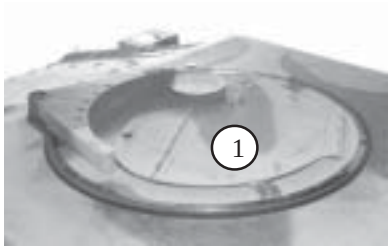

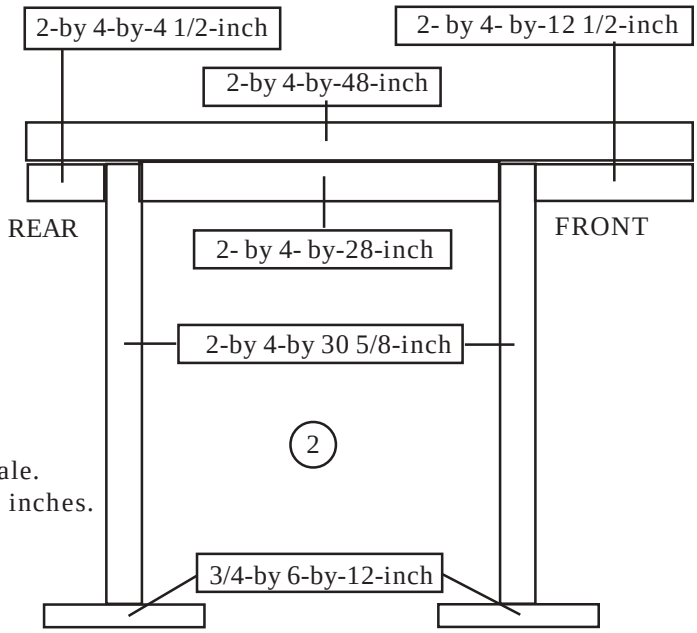

NOTES 1. Drawing is not drawn to scale.
2. All dimensions are given in inches.

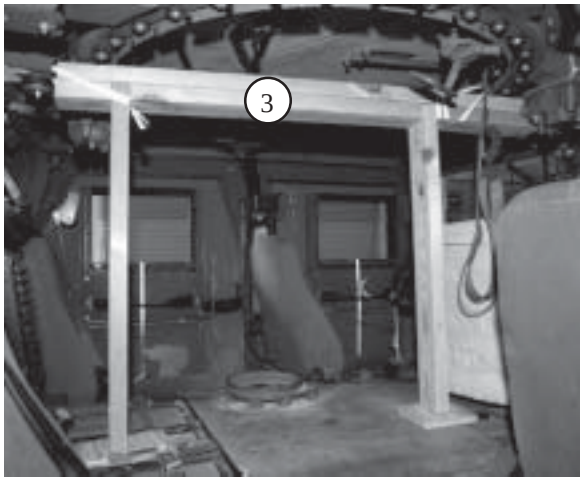

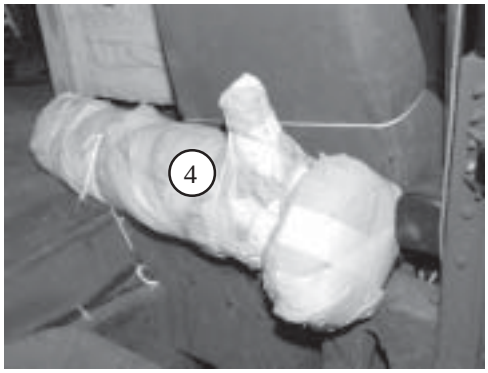

1. Secure the turret cover with the fasteners provided.
2. Build the turret housing support as shown with 8d nails.
3. Center the support under the turret housing with the front end of the support toward the front end of the truck. Tie the supports to the vehicle in place with two lengths of 1/2- inch tubular nylon webbing.
4. Pad the breather cap and fording stack with cellulose wadding. Tape and secure to the rear of the front passenger seat with type III nylon cord.

Figure 5-32. Passenger Compartment Prepared

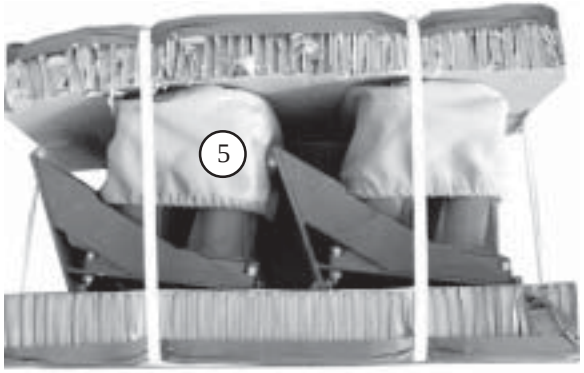

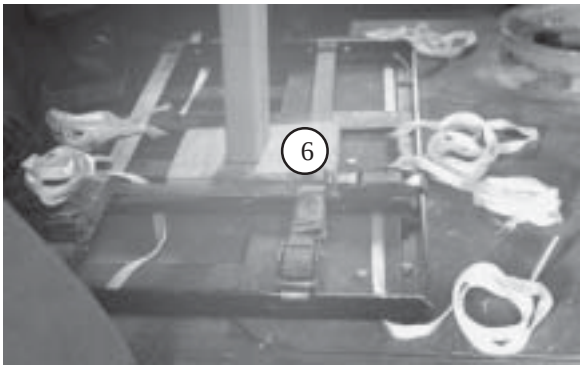

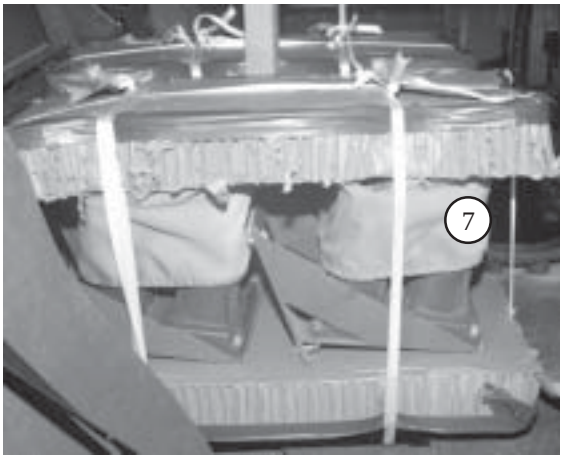

(5) Cut four 12- by 26- inch pieces of honeycomb. Place two LVOSS units on top of one piece of the 12- by 26- inch honeycomb. Place the second piece of 12- by 26-inch honeycomb on top of the LVOSS units. Tape the edges of the honeycomb. Secure with three lengths of 1/2-inch tubular nylon. Repeat this step for the other two LVOSS units.

(6) Preposition two 6 foot lengths of 1/2- inch tubular nylon webbing under each ammunition rack on each side of the turret support from side to side.

(7) Place the LVOSS units prepared on each side of the turrent support frame. Secure the units to the ammunition racks with the pre-positioned lengths of 1/2- inch tubular nylon.

Figure 5-32. Passenger Compartment Prepared (Continued)

STOWING THE ACCOMPANYING LOAD IN M1114

5-23. Stow the accompanying load as shown in Figure 5-33.

CAUTION

Only ammunition listed in FM 10-500-53/MCRP 4-3.81/TO 13C7-18-41 maybe airdropped. Package, label and mark hazardous material according to AFMAN (I) 24-204/TM 38-250.

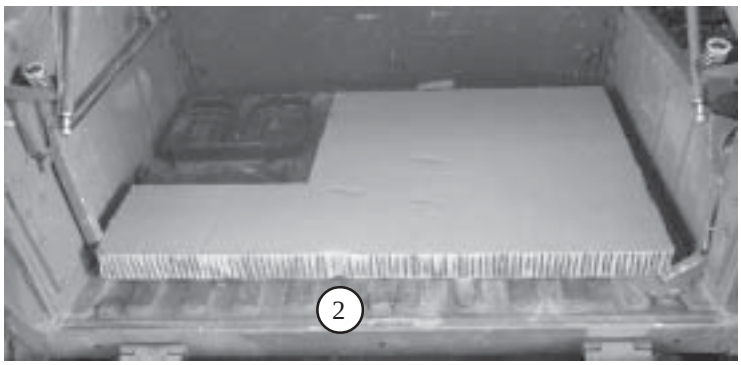

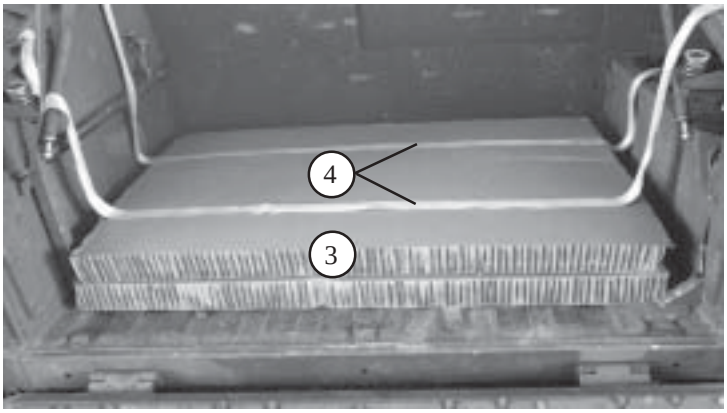

1. Tighten all straps in the rear cargo compartment and secure with 2-inch adhesive tape. (not shown)
2. Cut a 36- by 47-inch piece of honeycomb. Make a 16- by 22-inch cut out to accommodate the fuel water can rack. Place it on the floor of the compartment.
3. Cut and place a 36- by 47-inch piece of honeycomb, and place it on top of the previously positioned piece of honeycomb in step 2.
4. Preposition two 15 foot lashings on top of the honeycomb in step 3. Place the first lashing 8 inches from the rear edge and the second lashing 25 inches from the rear of the honeycomb.

Figure 5-33. Accompanying Load Stowed

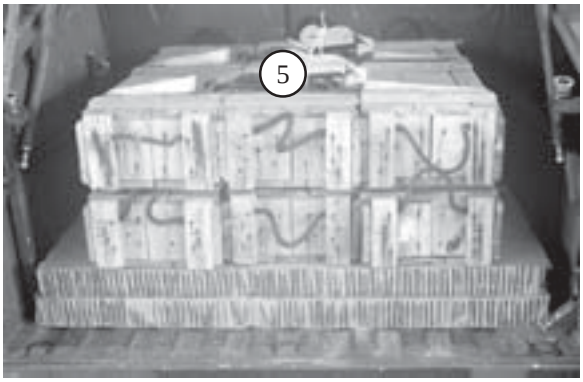

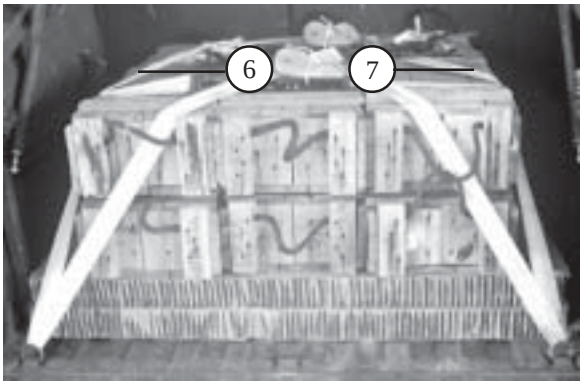

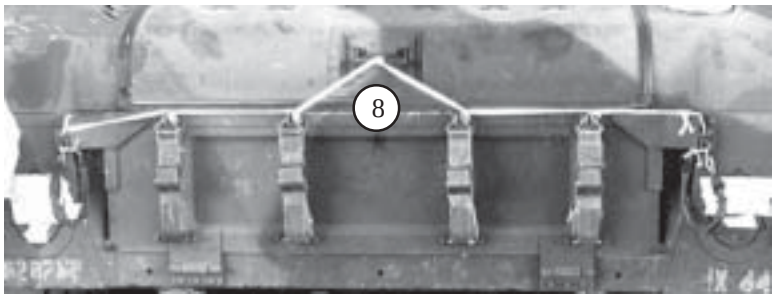

(5) Position two layers of three ammunition boxes on the pre-positioned lashings. The boxes must weigh between 500 and 600 pounds. Secure the lashings on top with D-rings and load binders.

(6) Route a 15-foot lashing through the cargo compartment left rear tie-down ring. Route the lashing over the ammunition boxes, through the compartment right front tie-down ring and back over the ammunition boxes. Secure the lashings with a D-ring and load binder.

(7) Route a 15-foot lashing through the cargo compartment right rear tie-down ring. Route the lashing over the ammunition boxes, through the compartment left front tie-down ring and back over the ammunition boxes. Secure the lashings with a D-ring and load binder.

(8) Close the tailgate and hatch. Secure the tailgate and hatch with doubled length of 1/2 inch tubular nylon webbing.

Figure 5-33. Accompanying Load Stowed (Continued)

PREPARING ROOF OF M1114

5-24. Prepare the roof of the M1114 shown in Figure 5-34.

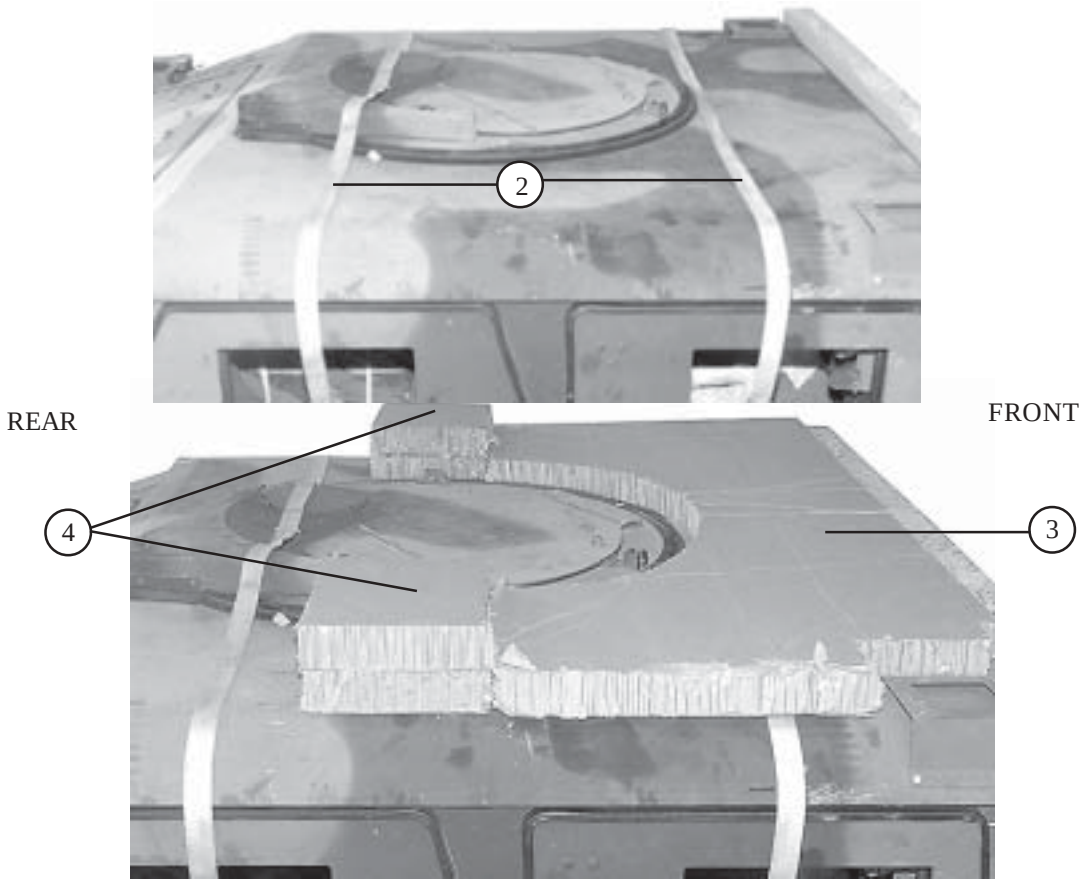

1. Secure all the LVOSS cables to the LVOSS brackets or to the inside of the cab with type I, 1/4-inch cotton webbing or adhesive tape. (not shown)

2. Place two 15-foot lashings over the roof. Center the lashings on the front and rear door window openings. Place the lashings so that the D-rings and running ends will be accessible from outside the truck.

3. Place a 36- by 81-inch piece of honeycomb on the front top of the truck. Make a cutout in the honeycomb for the turret ring and the LVOSS brackets.

4. Place two pieces of honeycomb 12 inches long and cut to fit wide on each side of the turret fixture to the rear of the honeycomb placed in step 3.

Figure 5-34. Roof of M1114 Prepared

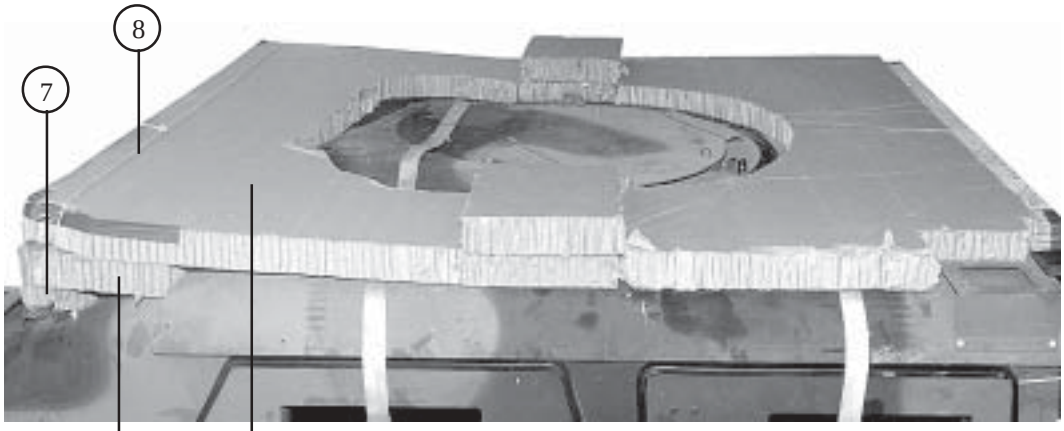

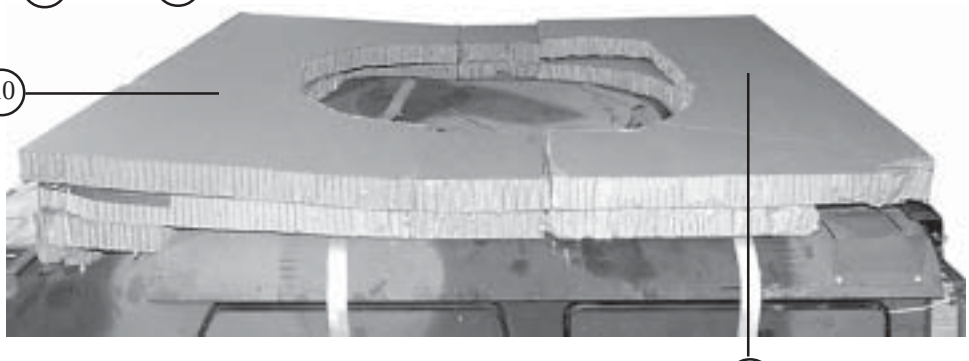

5 Cut a 12- by 81-inch piece of honeycomb and place it on the top part of the hatch.

6 Place a 36- by 81-inch piece of honeycomb behind the pieces in step 4. Make a cutout for the turret.

7 Cut an additional piece of 8- by 81-inch honeycomb and place it under the 12- by 81-inch piece to make it level.

8 Secure the honeycomb in steps 5, 6 and 7 together with type III nylon cord. Tape the edges where the type III nylon cord comes into contact with the honeycomb.

9 Place a second layer of 36- by 81-inch piece of honeycomb on top of the front piece of honeycomb. Make a cutout for the turret ring.

10 Place a second layer of 36- by 81- inch piece of honeycomb on top of the rear piece of honeycomb and flush against the piece of honeycomb placed in step 5. Make a cutout for the turret ring.

Figure 5-34. Roof of M1114 Prepared (continued)

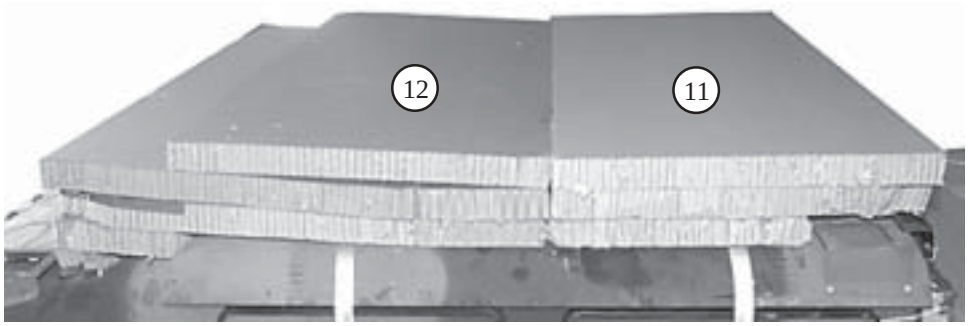

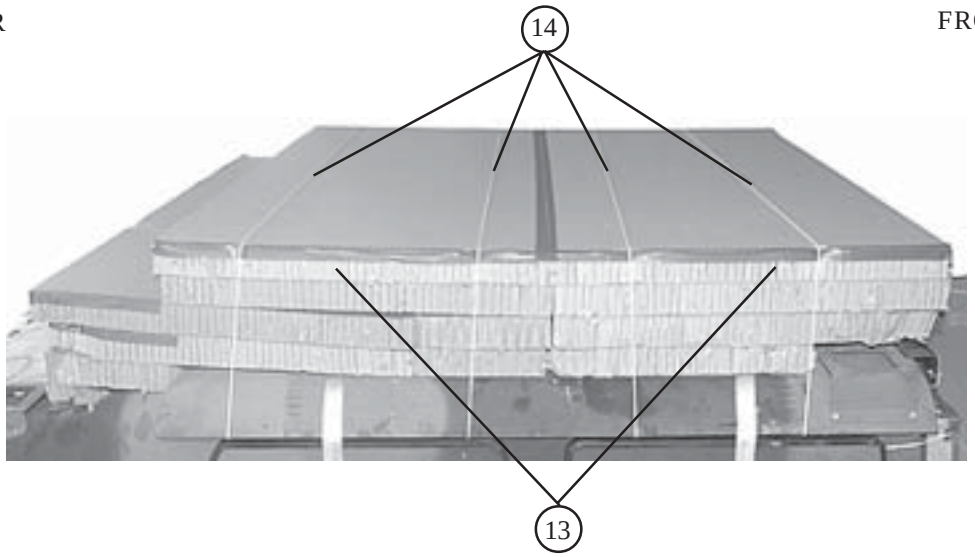

(11) Place a 36- by 81-inch piece of honeycomb on top of the front pieces of honeycomb.

(12) Place a 36- by 81-inch piece of honeycomb on top of the rear pieces of honeycomb and flush against the piece placed in step 11.

(13) Place two 36- by 81-inch pieces of honeycomb on top of the honeycomb placed in steps 11 and 12.

(14) Secure the pieces of honeycomb with four lengths of type III nylon cord over the top and inside the cab. Tape the edges of the honeycomb where the type III nylon cord contacts it.

(15) Close the doors and secure them shut with the lashings provided in step 2. (not shown)

Figure 5-34. Roof of M1114 Prepared (Continued)

LIFTING AND POSITIONING TRUCK AND INSTALLING OPTIONAL DRIVE-OFF AIDS

5-25. Install the lifting slings as shown in Figure 4-13. Attach the optional drive-off aids to the wheels of the truck as shown in Chapter 3 of this manual. Position the truck on the platform as shown in Figure 5-35.

LASHING TRUCK

5-26. Lash the truck to the platform as shown in Figures 5-36 through 5-38.

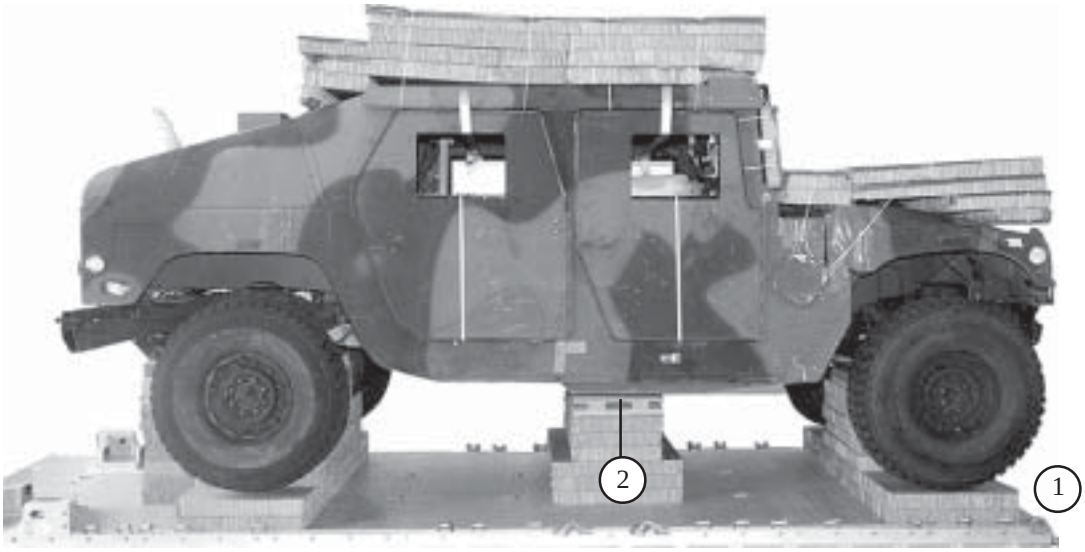

1. Position the truck so the front bumper has 6 1/2 inches of overhang from the front edge of the platform.
2. Ensure the center frame cross member rests squarely on the 6 inch part of honeycomb stack 2.
3. Install optional drive off aids if needed. (not shown)
4. Remove the lift kit. (not shown)

Figure 5-35. M1114 Up Armored HMMWV Positioned on Platform

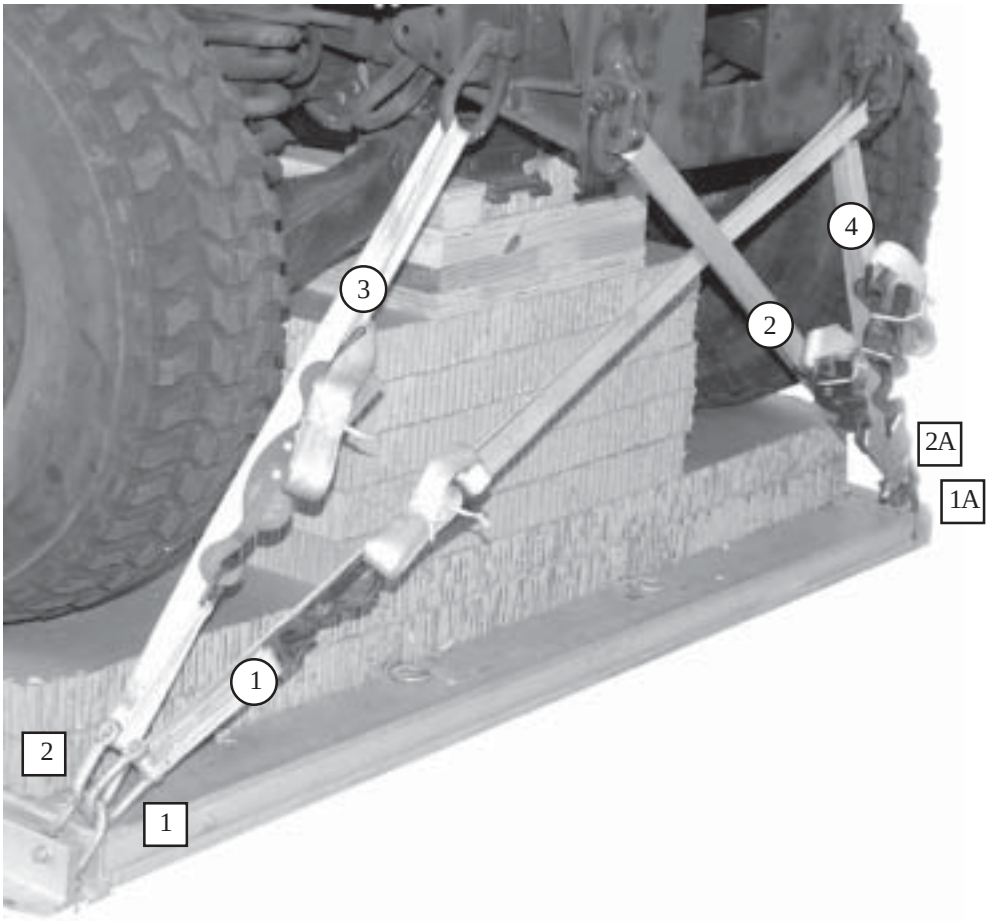

Lashing Number	Tiedown Clevis Number	Instructions
		Pass lashing:
1	1	Through front left lifting shackle.
2	1A	Through front right lifting shackle.
3	2	Through front right tie-down shackle.
4	2A	Through front left tie-down shackle.

Figure 5-36. Lashings 1 through 4 Installed

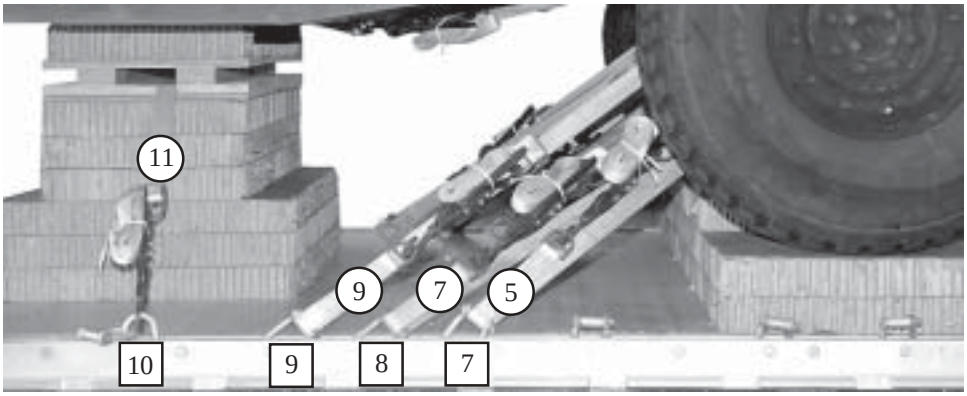

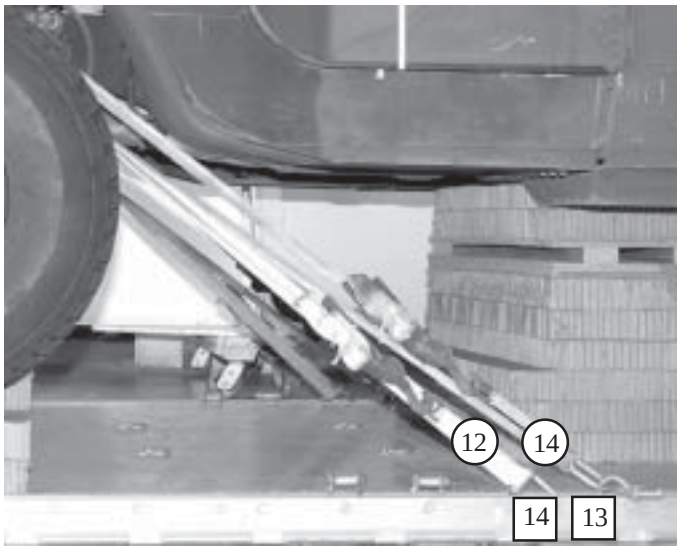

Lashing Number	Tiedown Clevis Number	Instructions
		Pass lashing:
5	7	Around front right lower control arm.
6	7A	Around front left lower control arm.
7	8	Around front right lower control arm.
8	8A	Around front left lower control arm.
9	9	Through tie-down bracket behind the front right coil spring.
10	9A	Through tie-down bracket behind the front left coil spring
11	10 and 10A	Through it's own D-ring around clevis 10A, through the strong back on stack 2, and attach it with a D-ring and load binder to clevis 10.
12	14	Through tie-down bracket in front of the right rear coil spring.
13	14A	Through tie-down bracket in front of the left rear coil spring
14	13	Through tie-down bracket in front of the right rear coil spring.
15	13A	Through tie-down bracket in front of the left rear coil spring.

Figure 5-37. Lashings 5 through 15 Installed

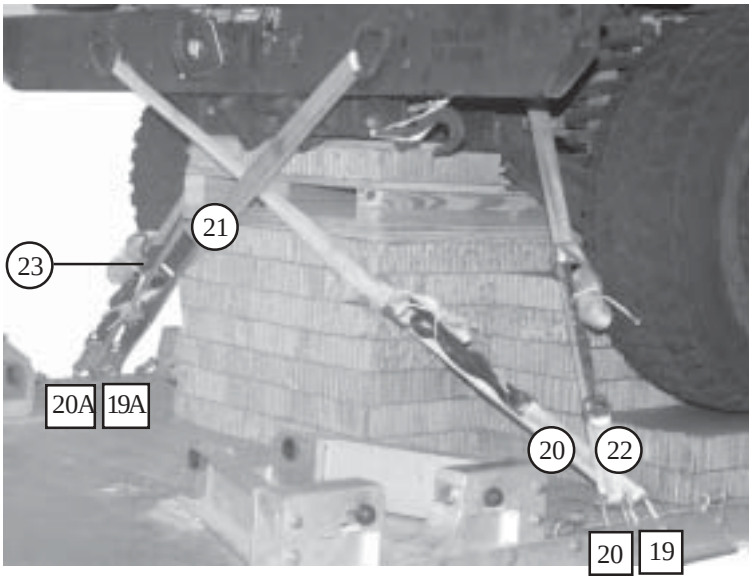

Lashing Number	Tiedown Clevis Number	Instructions
		Pass lashing:
16	16	Around rear right control arm.
17	16A	Around rear left control arm.
18	15	Around rear right control arm.
19	15A	Around rear left control arm.
20	19	Through rear left lifting shackle ring.
21	19A	Through rear right lifting shackle ring.
22	20	Through rear right tie-down ring.
23	20A	Through rear left tie-down ring.

Figure 5-38. Lashings 16 through 23 Installed

INSTALLING ATTITUDE CONTROL SYSTEM AND SUSPENSION SLINGS

5-27. Construct and inspect the Attitude Control System (ACS) according to Chapter 3, Figure 3-32. Install the ACS as shown in Figure 5-39. Install the suspension slings as shown in Figure 5-40. Secure the ACS according to Chapter 3 and as shown in Figure 5-41. Complete the installation of the suspension slings, pad the two point links and safety tie and secure the slings as shown in Figure 5-42.

CAUTION

Center the ACS assemblies widthwise on the load.

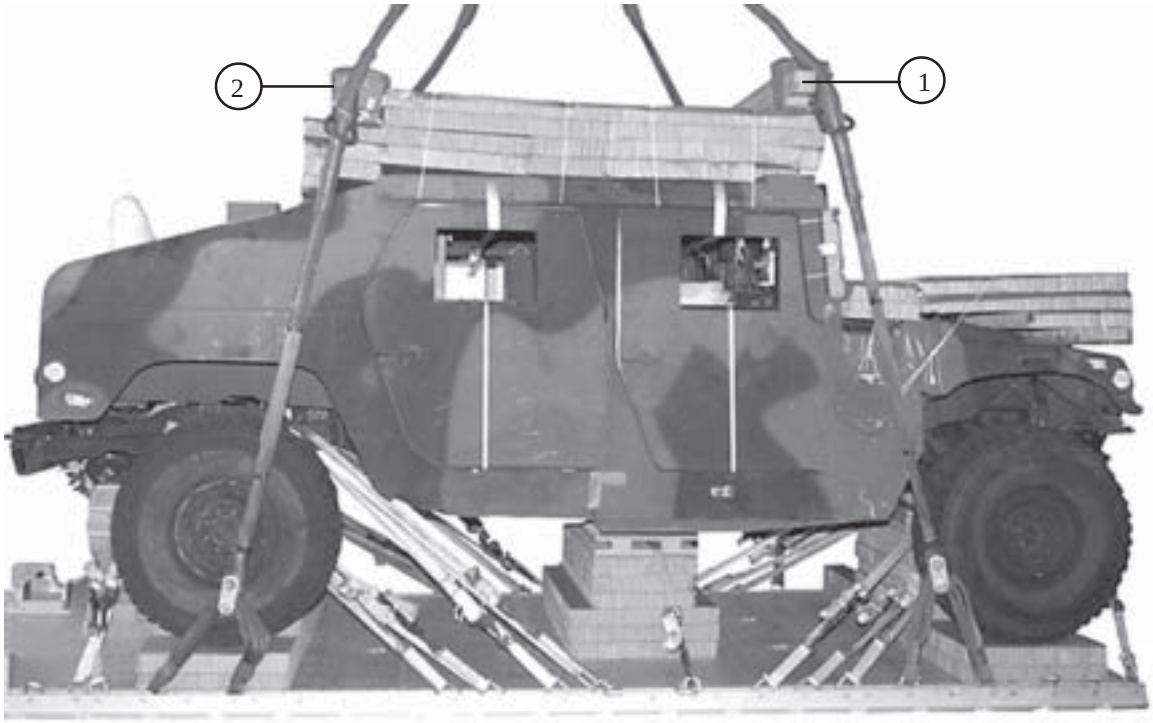

(1) Center the front ACS on the roof protection honeycomb. Place the 4- by 4-inch piece of lumber facing the rear.

(2) Center the rear ACS as far forward as possible on the ledge on the roof protection honeycomb. Place the 4- by 4-inch piece of lumber to the front.

Figure 5-39. ACS Installed

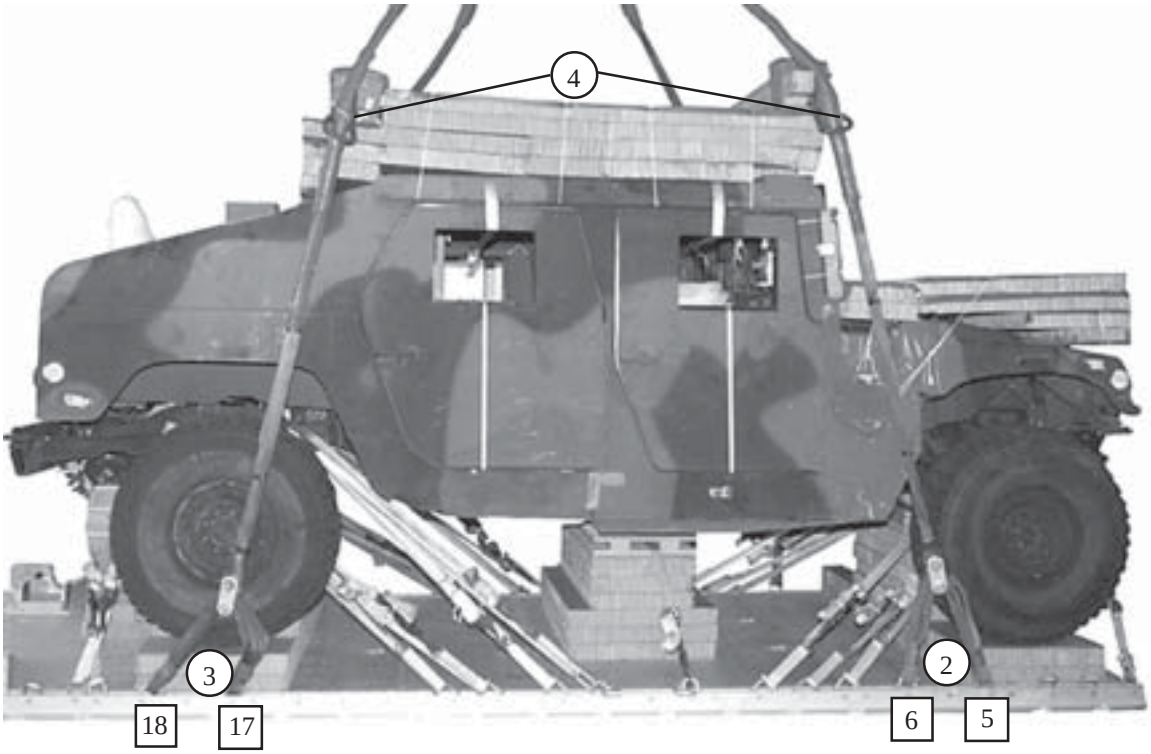

1. Attach a 3 3/4-inch, two-point link to an 11-foot (4-loop), type XXVI nylon sling. Pass a 3-foot (4-loop), type XXVI nylon sling through the two-point link. Repeat this procedure three times for the other three suspension slings. (not shown)

2. Attach the ends of a 3-foot sling from step 1 to clevises 5 and 6 and repeat for clevises 5A and 6A.

3. Attach the ends of a 3-foot sling from step 1 to clevises 17 and 18 and repeat for clevises 17A and 18A.

4. Pad the 11-foot slings with felt and tape approximately 6 to 12 inches below the ACS clevis, extending to 6 to 12 inches above the top of the ACS. Pass each suspension sling through the closest ACS clevis.

Figure 5-40. Suspension Slings Installed

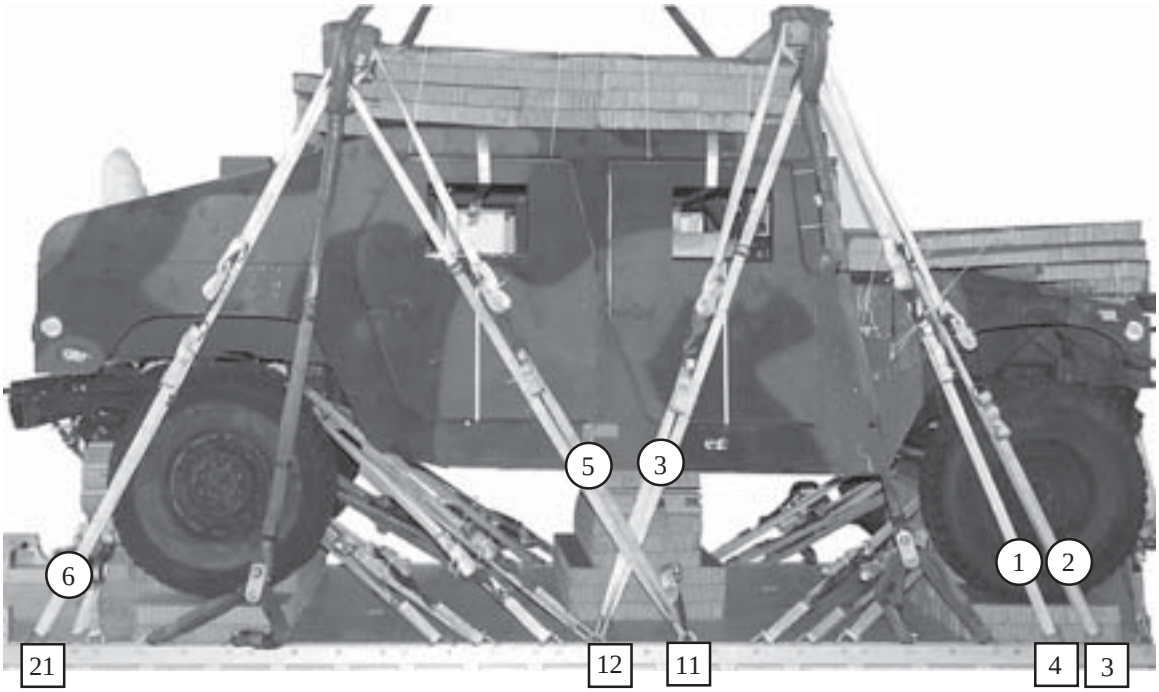

1. Run a 30-foot lashing from clevis 4, through the ACS clevis from the outside to inside, rear to front, around the 4- by 4-inch piece of lumber, and back to clevis 4. Loosely secure the lashing. Repeat on the left side using clevis 4A.

2. Repeat step 1 using clevises 3 and 3 A

3. Run a 30-foot lashing from clevis 12, through the ACS clevis from outside to inside, front to rear, around the 4- by 4-inch piece of lumber, and back to clevis 12. Loosely secure the lashing and repeat on the left side using clevis 12A.

4. Make sure the ACS is centered on the load, and tighten all the lashings on the left and right at the same time. Tighten the lashings in the following order; 4 and 4A, 3 and 3A, and 12 and 12A.

5. Run a 30-foot lashing from clevis 11, through the ACS clevis from outside to inside, rear to front, around the 4- by 4-inch piece of lumber, and back to clevis 11. Loosely secure the lashing and repeat on the left side using clevis 11A.

6. Run a 30-foot lashing from clevis 21, through the ACS clevis from outside to inside, rear to front, around the 4- by 4-inch piece of lumber, and back to clevis 11. Loosely secure the lashing and repeat on the left side using clevis 21A.

7. Make sure the ACS is centered on the load, and tighten all the lashings on the left and right at the same time. Tighten the lashings in the following order; 11 and 11A, 21 and 21A.

Figure 5-41. ACS Secured

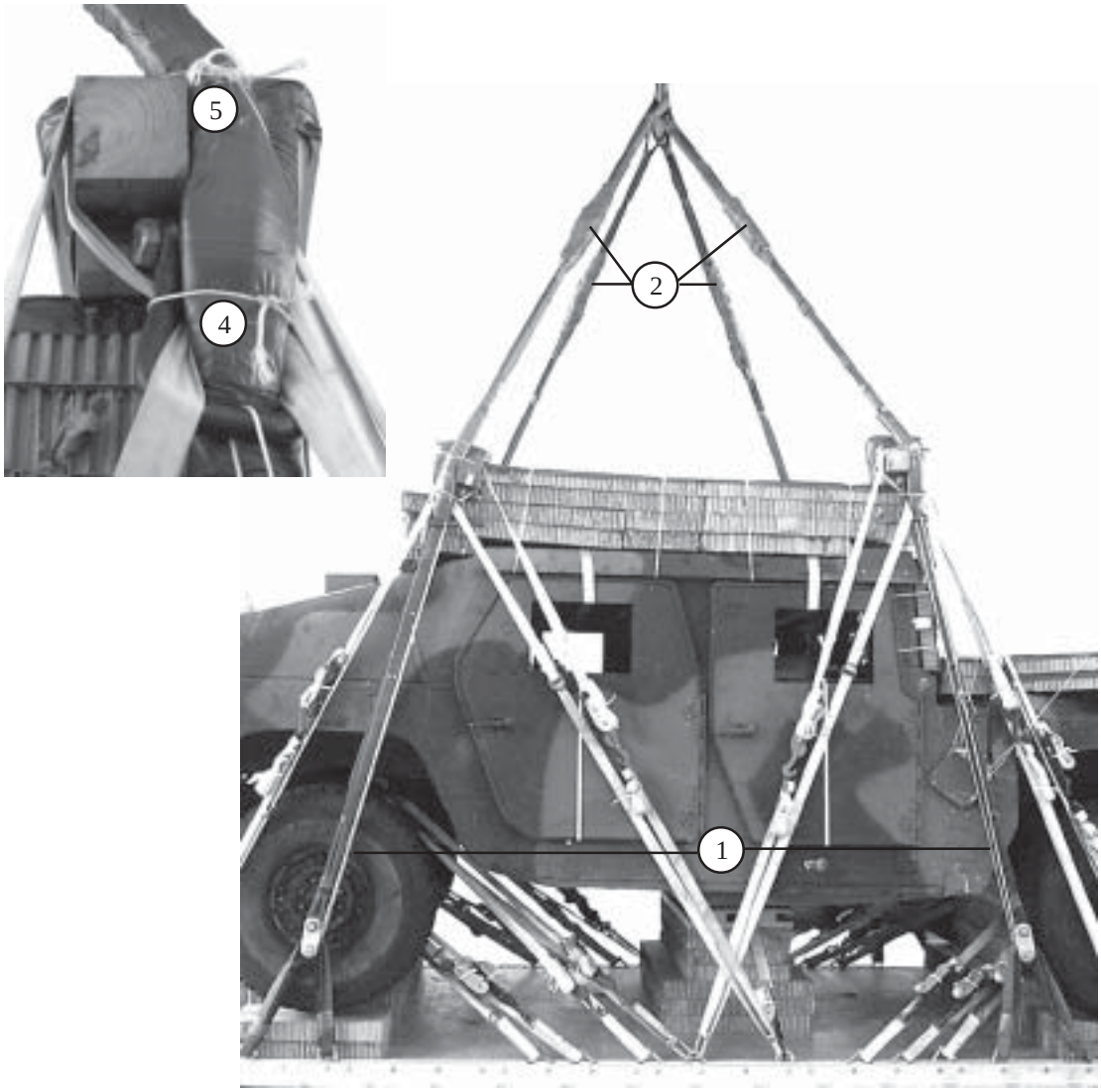

1. Safety tie the two-point links to the ACS clevises with a loop of type III nylon cord.
2. Attach a 3-foot (4-loop), type XXVI nylon sling to the free end of each 11-foot, 4-loop with a 3 3/4-inch, two-point link. Pad each link with felt and tape in place.
3. Extend the slings upward with a lifting device until they are taut.
4. Tie a length of type III nylon cord around and behind the suspension sling, and around each ACS sling. See Figure 4-19 for a detailed view. Repeat for the remaining three suspension slings.
5. Tie a length of type III nylon cord around the suspension sling, behind all lashings and around the 4- by 4-inch piece of lumber of the ACS. Repeat for all suspension slings.

Figure 5-42. Two Point Links and Suspension Slings Secured

INSTALLING OUTRIGGER ASSEMBLIES

5-28. Assemble, install, and safety tie the mast and foot assemblies on the DRAS platform as shown in Chapter 3, Figures 3-33 through 3-36, steps 1 through 3.

STOWING CARGO PARACHUTES

5-29. Prepare, stow and restrain four G-11D cargo parachutes on the hood of the truck as shown in Chapter 3 and Figure 5-43.

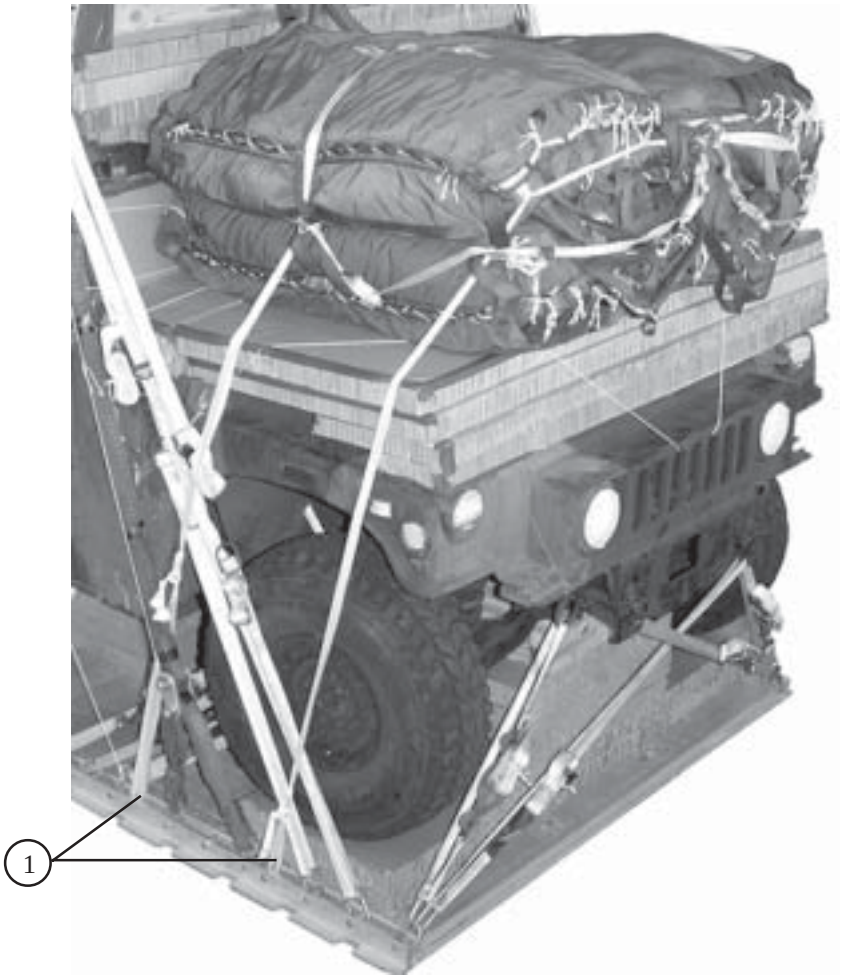

(1) Restrain the parachutes with type VIII nylon webbing to bushings 4, and 4A and 8 and 8A.

Figure 5-43. Cargo Parachutes Installed and Restrained

STOWING DEPLOYMENT PARACHUTE

5-30. Prepare, stow and install the deployment parachute according to Chapter 3, Figures 3-23 and 3-24 and Figure 5-44.

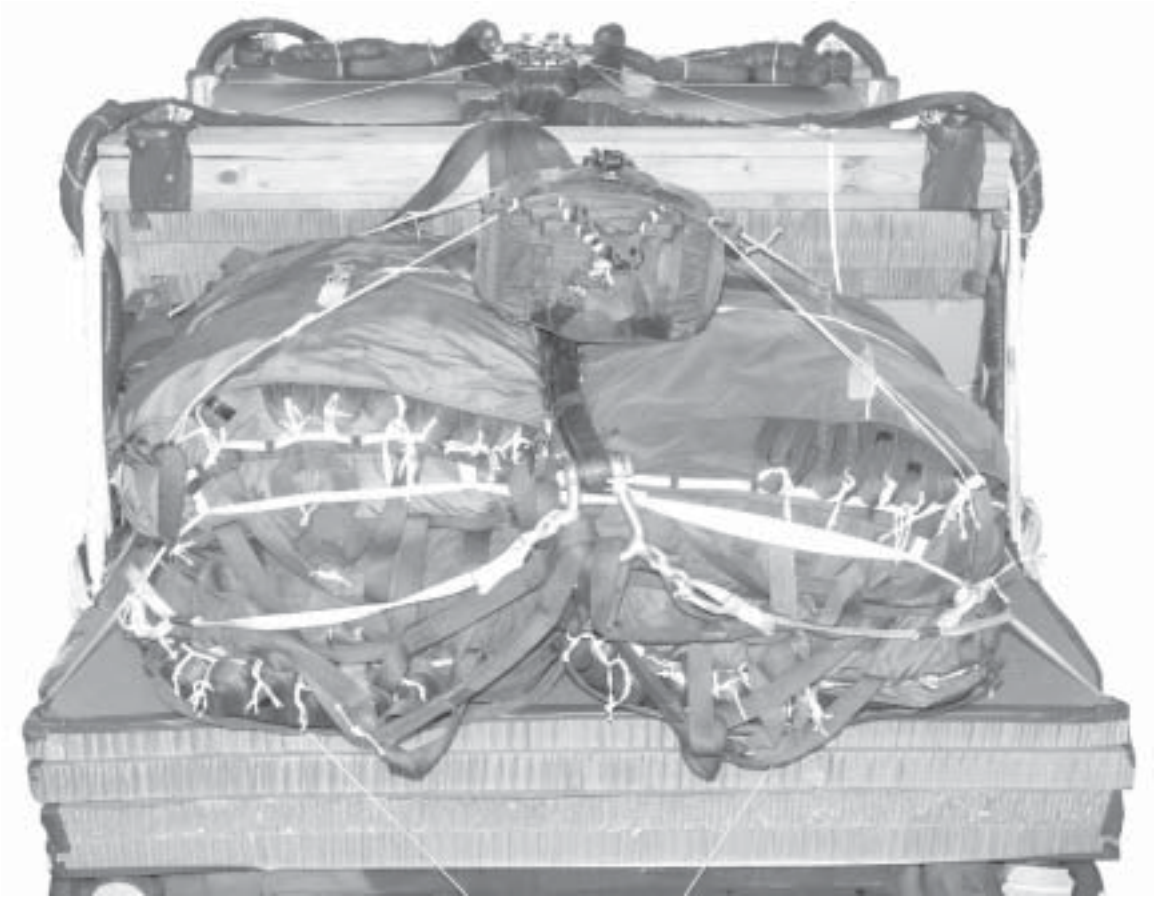

Figure 5-44. Deployment Parachute Installed

INSTALLING M-1 PARACHUTE RELEASE SYSTEM

5-31. Prepare and install the M-1 parachute release system according to Chapter 3 and Figure 5-45.

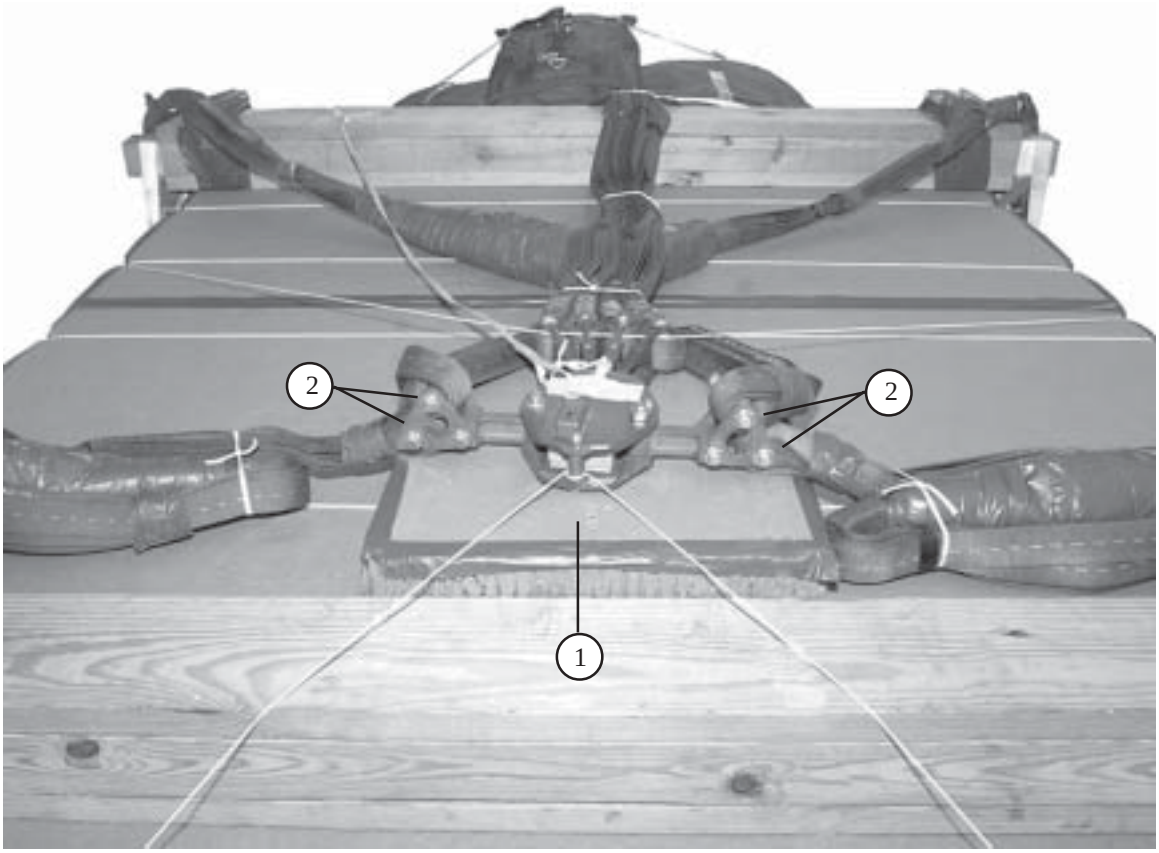

1. Cut and position a 20- by 20-inch piece of honeycomb. Center the honeycomb along the rear ACS. Tape the outside edges of the honeycomb.

2. Remove the cotton buffers from the free ends of the suspension slings. Attach them to the release as shown.

3. Secure the front suspension slings together above the 3 3/4-inch, two-point links with one turn of 1/4-inch cotton webbing. (not shown)

Figure 5-45. M-1 Cargo Parachute Release Installed

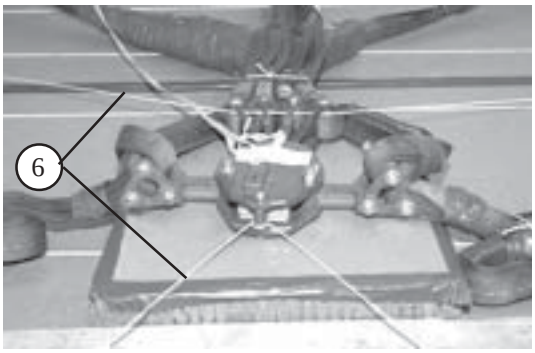

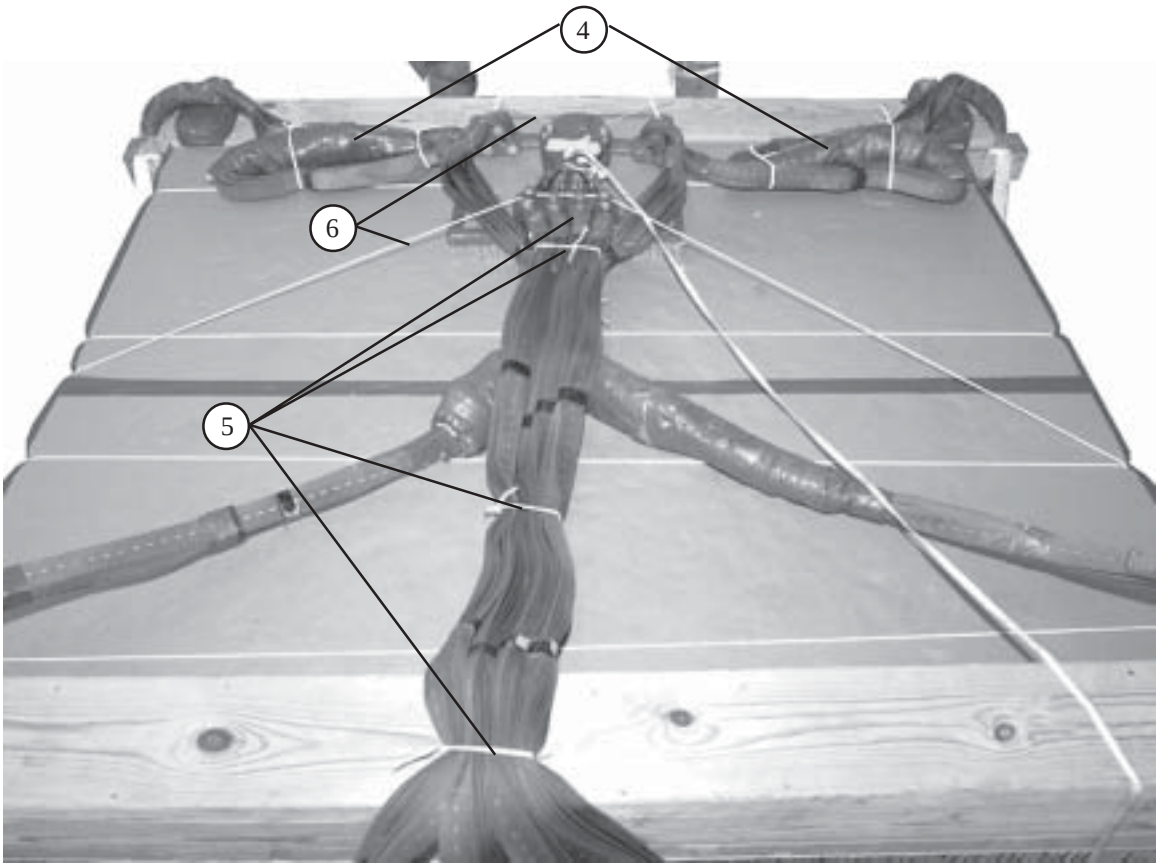

(4) S-fold the slack in the rear suspension slings and tie them around the two point links with 1/4-inch cotton webbing.

(5) Attach the riser extensions. Tie them in three places with type I, 1/4-inch cotton webbing.

(6) Secure the release to a convenient place on the load with type III nylon cord.

Figure 5-45. M-1 Cargo Parachute Release Installed (Continued)

INSTALLING MAST RELEASE KNIVES

5-32. Install the mast release knives as shown in Chapter 3 Figure 3-36 steps 4 through 10 and as shown in Figure 5-46.

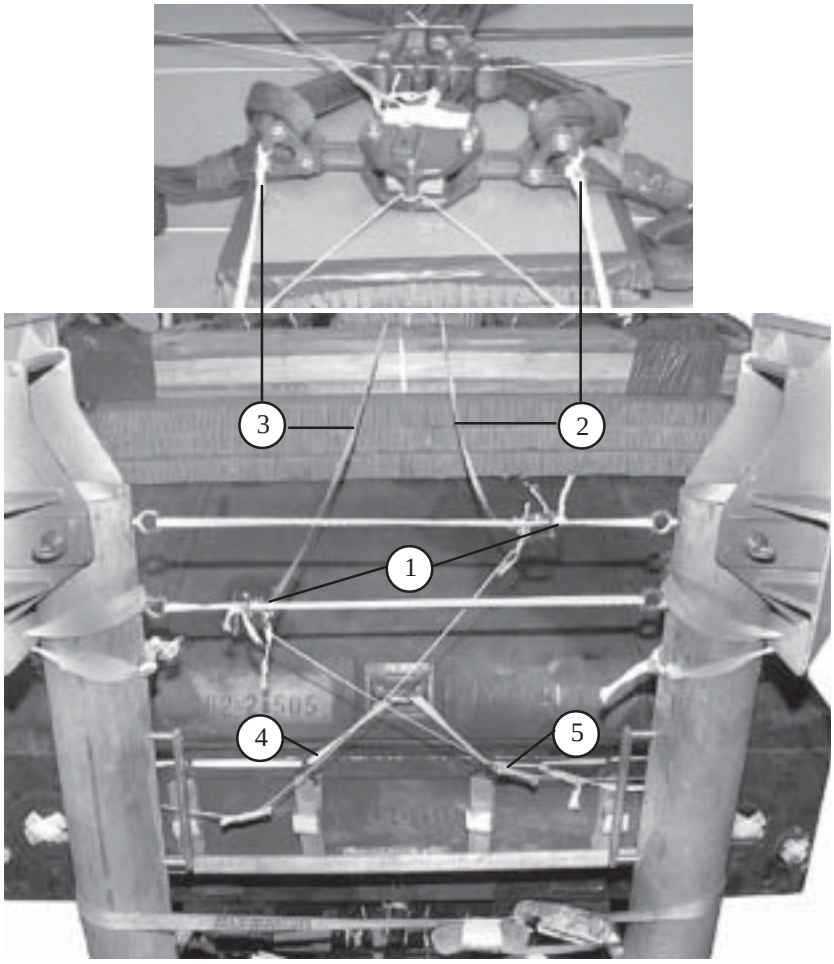

(1) The length of the left and right 1/2-inch tubular nylon webbing from the base of the guillotine knives to the lower suspension links of the release is 78 inches as shown in steps 5 and 6 of Figure 3-36.

(2) Tie a length of type III nylon cord through the left tailgate sling guide and to the body of the right top guillotine knife that measures 69 inches from tailgate sling guide to the base of the guillotine knife. Repeat for right tailgate sling guide and left lower guillotine knife (shown in steps 9 and 10 of Figure 3-36).

Figure 5-46. Mast Release Knives Installed

MARKING RIGGED LOAD

5-33. Mark the rigged load according to Chapter 3 and as shown in Figure 5-47.

EQUIPMENT REQUIRED

5-34. The equipment required to rig this load is given in Table 5-2.

CAUTION

Make the final rigger inspection required by Chapter 3 of this manual before the load leaves the rigging site.

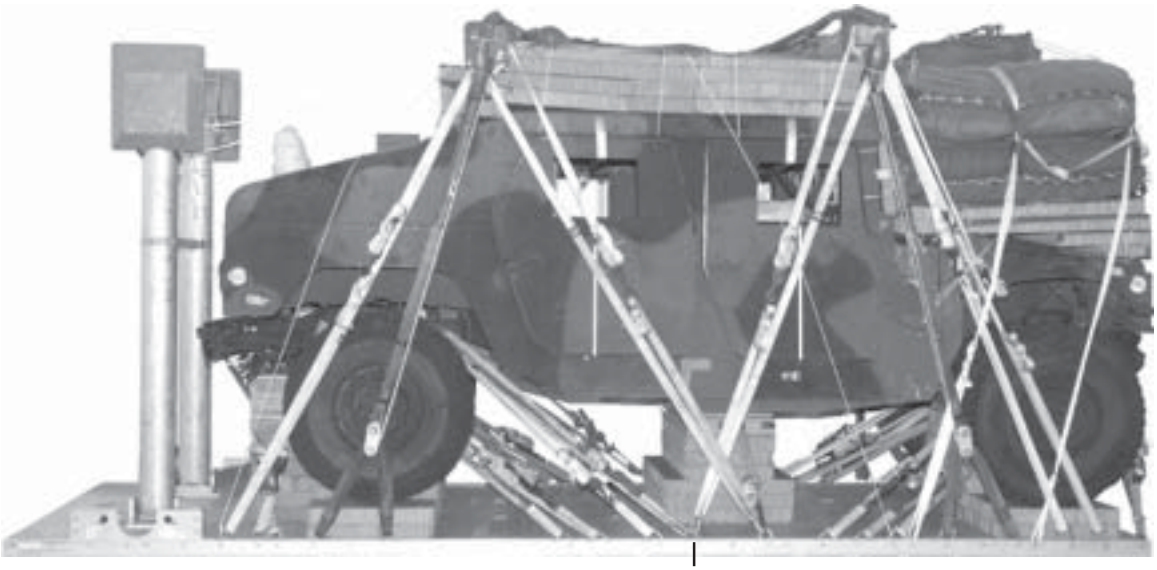

C/B

RIGGED LOAD DATA, M1114

Weight: Load shown.....14,400 pounds
Maximum load allowed.....14,500 pounds
Height (with four G-11D parachutes).....106 inches
Width.....94 inches
Length (overall).....216 inches
Overhang: Front (Bumper).....6 1/2 inches
Rear.....0 inches
CB (from front edge of platform).....94 inches

Figure 5-47. M1114 Up-Armored HMMWV Rigged for Dual Row Airdrop

Table 5-2. Equipment required for rigging M1114 Up-Armored HMMWV on a Dual Row Platform for Dual Row Airdrop

National Stock Number	Item	Quantity
1670-01-487-5461	Assembly, release away static line	1
8040-00-273-8713	Adhesive paste, 1-gal	As required
4020-00-240-2146	Cord, nylon, type III, 550-lb	As required
4030-00-090-5354	Clevis, large	5
8305 00 958 3615	Felt, 1/2 inch	As required
	Link assembly small:	
1670-01493-6419	Two-point, 3 3/4-in	9
	Lumber:	
5510-00-220-6146	2- by 4-in	As required
5510-00-220-6148	2- by 6-in	As required
5510-00-220-6274	4- by 4-in	As required
5530-00-618-8073	Plywood, 3/4-in	3 sheets
	Nail, steel wire, common,	
5315-00-010-4659	8d	As required
5315-00-010-4662	12d	As required
5315-00-753-3885	16d	As required
1670-00-753-3928	Pad, energy dissipating, honeycomb, 3- by 36- by 96-in	21 sheets
	Parachute:	
	Cargo:	
1670-01-016-7481	G-11D	4
	Cargo extraction (deployment parachute)	
1670-00-040-8135	28-foot	1
	Platform, Dual Row, 18-foot	1
1670-01-485-1656	Panel assembly, main	9
1670-01-485-1654	Rail, DRAS	2
1670-01-486-1342	Roller Pad, DRAS	4
1670-01-162-2372	Clevis assembly	46
1670-01-097-8816	Release, cargo parachute, M-1	1

Table 5-2. Equipment required for rigging M1114 Up-Armored HMMWV on a Dual Row Platform for Dual Row Airdrop (Continued)

National Stock Number	Item	Quantity
	Sling, cargo airdrop	
	For suspension:	
1670-01-062-6310	11-ft (4-loop), type XXVI nylon webbing	4
1670-01-062-6306	3-ft (4-loop), type XXVI nylon webbing	8
	For deployment:	
1670-01-062-6306	3-ft (4-loop), type XXVI nylon webbing	1
	For riser extention:	
1670-01-062-6313	60-ft (3-loop), type XXVI nylon webbing	4
	For ACS:	
1670-01-063-7761	16-ft (2-loop), type XXVI nylon webbing	2
	For lifting:	
1670-01-062-6304	9-ft (2-loop), type XXVI nylon webbing	2
1670-01-062-6303	12-ft (2-loop), type XXVI nylon webbing	2
1670-00-040-8219	Strap, parachute release, multicut	2
1670-00-937-0271	Knife release,cargo (guillotine)	2
1670-01-487-5464	Outrigger assembly	2
7510-00-266-5016	Tape, adhesive, 2-in	As required
1670-00-937-0271	Tie-down assembly, 15-ft	48
1670-00-725-1437	Tie-down, Cargo, Aircraft, (CGU-1B)	5
	Webbing:	
8305-00-268-2411	Cotton, 1/4-in, type I	As required
	Nylon:	
8305-00-082-5752	Tubular, 1/2-in	As required
8305-00-263-3591	Type VIII	8 yds

CHAPTER 6

RIGGING DUAL ROW AIRDROP SYSTEM (DRAS) M119 105-MILLIMETER HOWITZER AND ACCOMPANYING LOAD

DESCRIPTION OF LOAD

6-1. The M119, 105-mm howitzer (Figure 6-1) weighs 4,190 pounds. The length is 240 inches, reducible to 192 inches. It is 70 inches wide. Its height is 94 inches reducible to 54 inches.

The howitzer is rigged with 36 boxes of 105 mm ammunition and 6 boxes of fuses on a DRAS platform for DRAS airdrop. The load is rigged with three G-11D cargo parachutes.

PREPARING PLATFORM

6-2. Inspect, or assemble and inspect, a DRAS platform with outrigger assemblies and outrigger platform support weldments according to TM 10-1670-268-20&P/TO 13C7-52-22 and as shown in Figure 6-2.

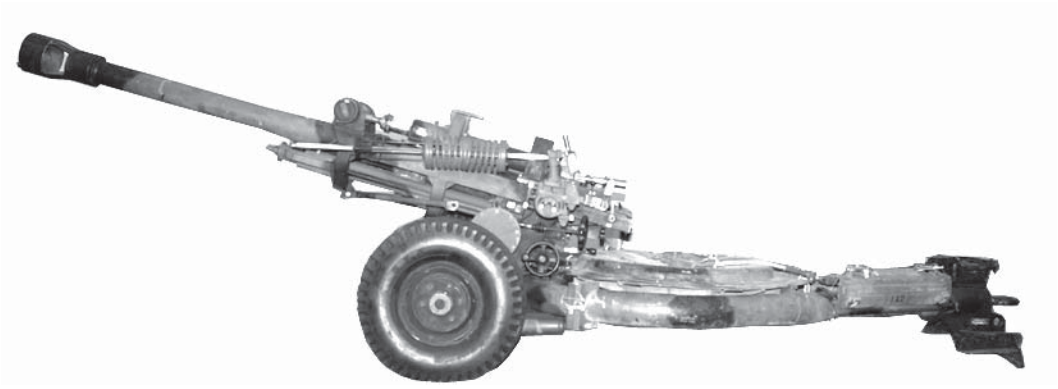

Figure 6-1. M119 105-Millimeter Howitzer

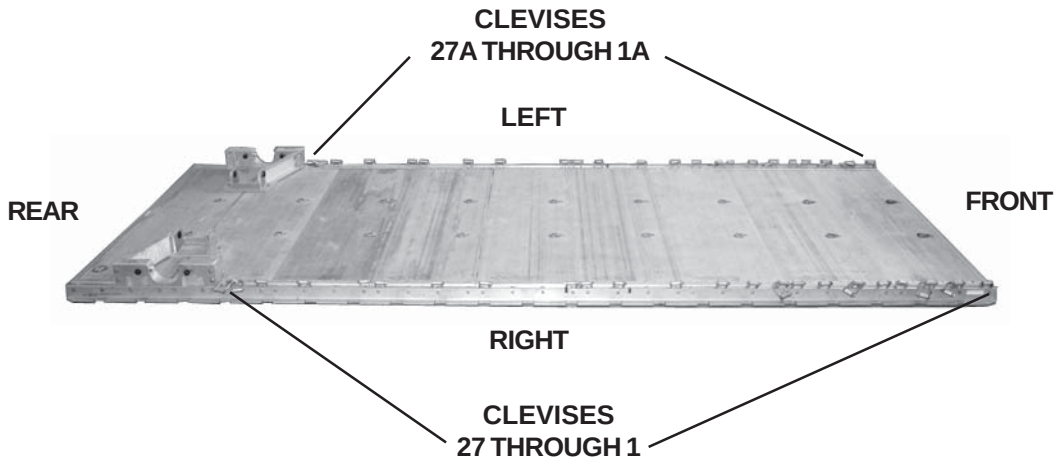

Step:

1. Starting at the front of each platform side rail, install clevises on the bushings bolted on holes 1, 2 (double), 3 (double), 4, 5, 6 (double), 7, 8, 9 (double), 10, 11, 13, 15, 16, 17, 20, 22, 24, 25, 27, 29, and 30 (triple).

2. Starting at the front of the platform, number the clevises bolted to the right side from 1 through 27 and those bolted to the left side from 1A through 27A.

3. Label the tiedown rings according to Chapter 3 of this manual.

Figure 6-2. Platform Prepared

STOWING ACCOMPANYING LOAD

6-3. Stow the accompanying load of 36 boxes of 105-mm ammunition as shown in Figures 6-3 through 6-5. Six boxes of fuses will be stowed after the gun is lashed to the platform. When hazardous materials are rigged as part of the load, they must be packaged, marked, and labeled according to AFMAN(I) 24-204/TM 38-250.

CAUTION
Only ammunition listed in FM 10-500-53/ MCRP 4-3.8/TO 13C7-18-41 may be airdropped.

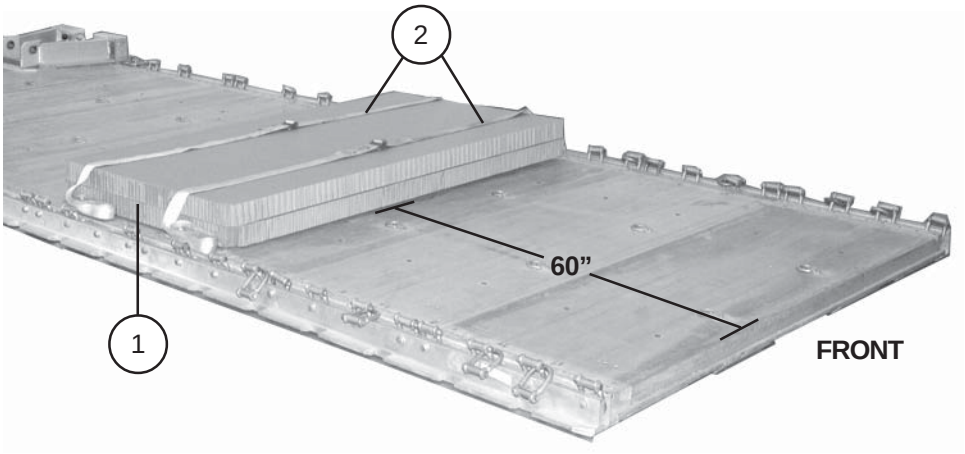

1 Center two 36- by 73-inch pieces of honeycomb 60 inches from the front edge of the platform.

2 Form two 30-foot lashings according to Chapter 3 of this manual and lay them side to side on the honeycomb.

Figure 6-3. First Stack of Honeycomb Positioned with Lashings

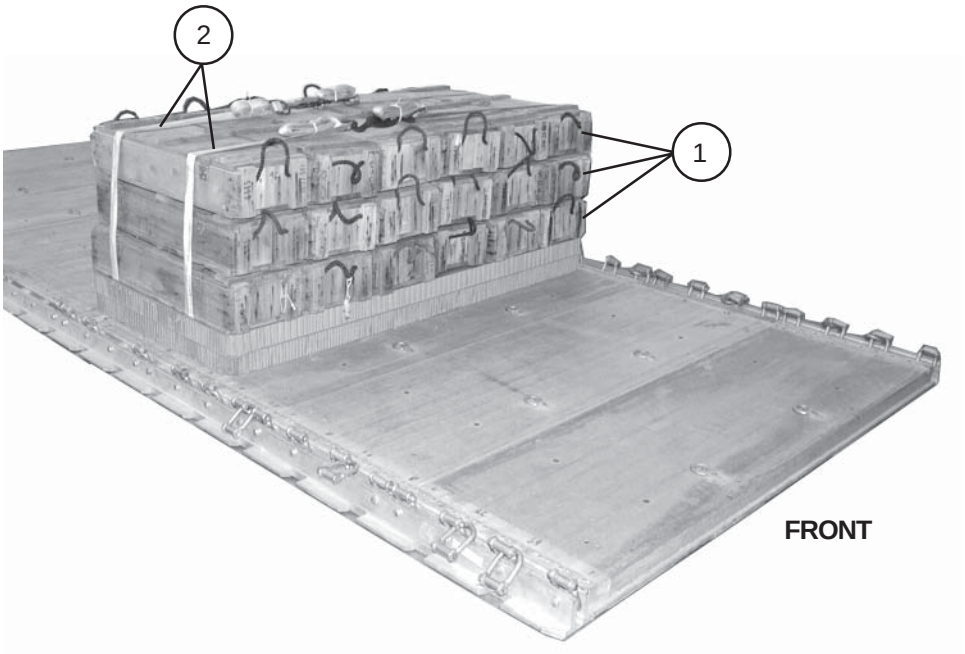

1 Place 18 boxes of 105-mm ammunition centered on the honeycomb. Position boxes three high and six across.

2 Secure the 30-foot lashings with D-rings and load binders.

Figure 6-4. First Stack of Ammunition Lashed

Notes: 1. All measurements are given in inches.
2. This drawing is not drawn to scale.

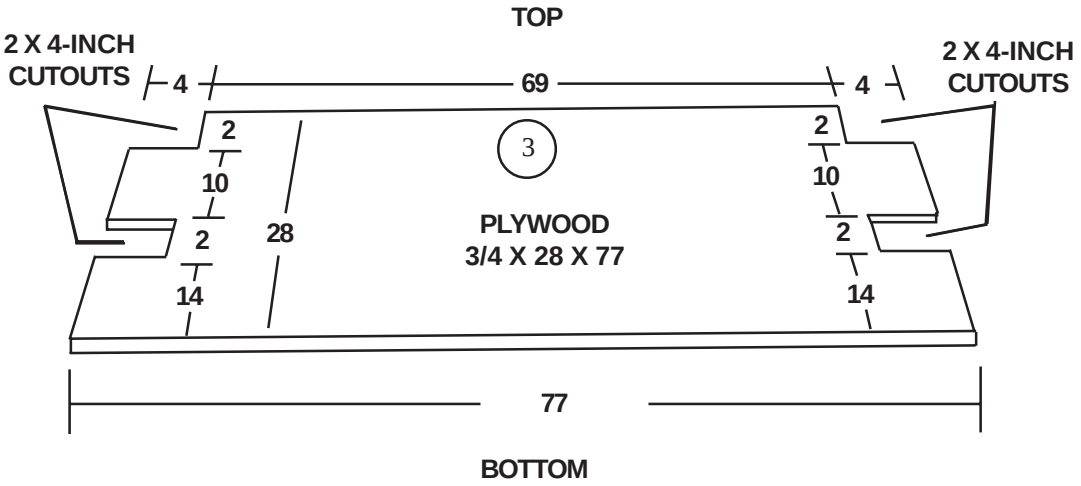

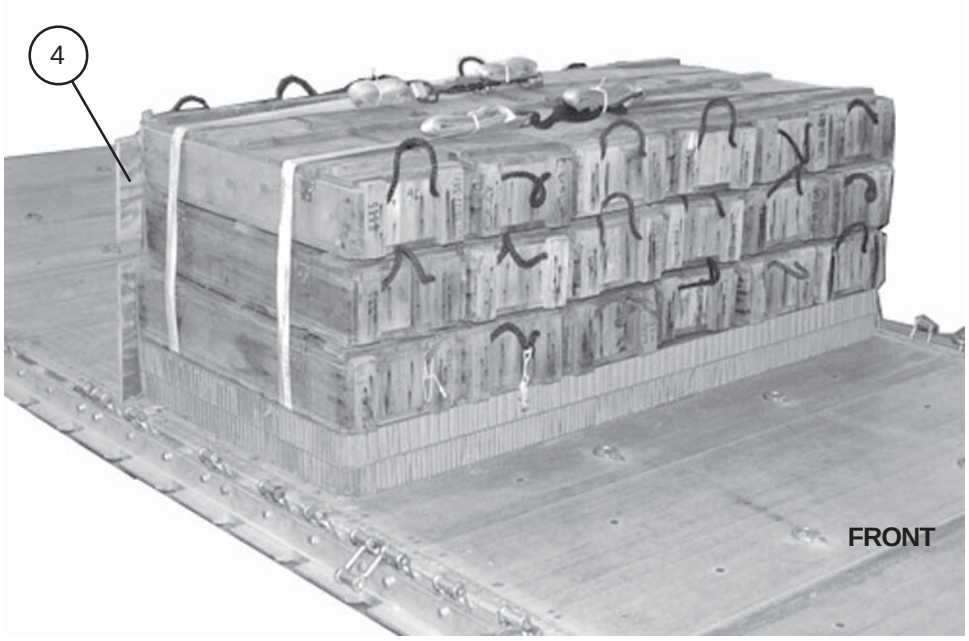

3 Cut four endboards as shown using 3/4- by 28- by 77-inch pieces of plywood.

4 Place one endboard against the rear of the stack of boxes.

Figure 6-4. First Stack of Ammunition Lashed (Continued)

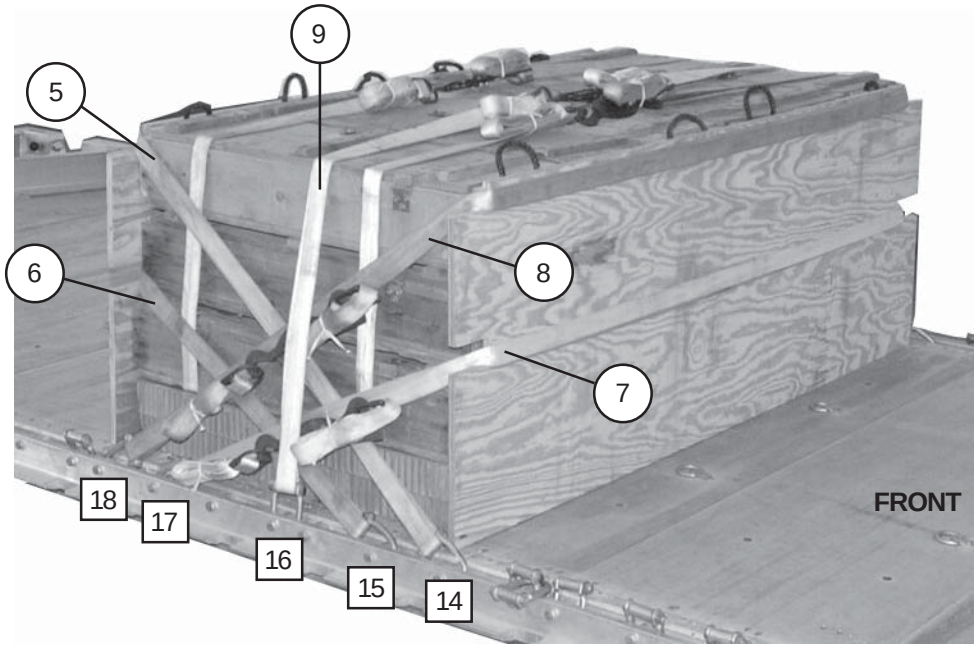

5 Form seven 30-foot lashings according to Chapter 3 of this manual. Pass the ends of a 30-foot lashing through clevises 14 and 14A and through the upper cutouts in the rear endboard. Secure the lashing in the center of the end board with two D-rings and a load binder.

6 Pass the ends of a 30-foot lashing through clevises 15 and 15A and through the lower cutouts in the rear endboard. Secure the lashing in the center of the end board with two D-rings and a load binder.

7 Place an endboard against the front of the stack of boxes. Pass the ends of a 30-foot lashing through clevises 17 and 17A and through the lower cutouts in the front endboard. Secure the lashing at the side of the load with two D-rings and a load binder.

8 Pass the ends of a 30-foot lashing through clevises 18 and 18A and through the upper slots in the front endboard. Secure the lashing at the side of the load with two D-rings and a load binder.

9 Pass the ends of a 30-foot lashing through clevises 16 and 16A and over the top of the stack of boxes. Secure the lashing in the center of the boxes with two D-rings and a load binder.

Figure 6-4. First Stack of Ammunition Lashed (Continued)

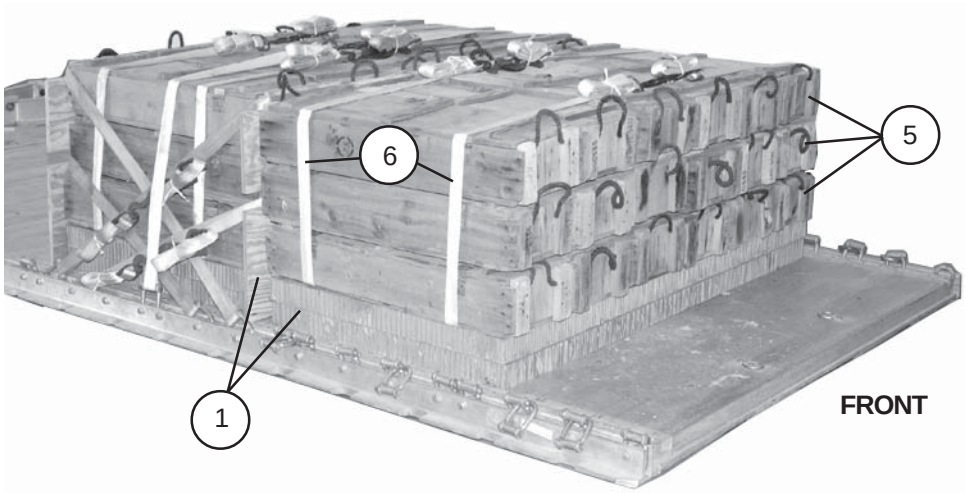

1. Set a third endboard against the front of the stack. Center two 36- by 73-inch pieces of honeycomb flush against the endboard.
2. Form two 30-foot lashings according to Chapter 3 of this manual and lay them side to side on the honeycomb. Refer to Figure 6-3, step 2.
3. Pre-position a 30-foot lashing through clevis 4A and through the upper cutouts (not shown).
4. Pre-position a 30-foot lashing through clevis 8A and through the lower cutouts (not shown).
5. Place 18 boxes of 105-mm ammunition centered on the honeycomb. Position boxes three high and six across.
6. Secure the 30-foot lashings with D-rings and load binders.

Figure 6-5. Second Stack of Ammunition Lashed

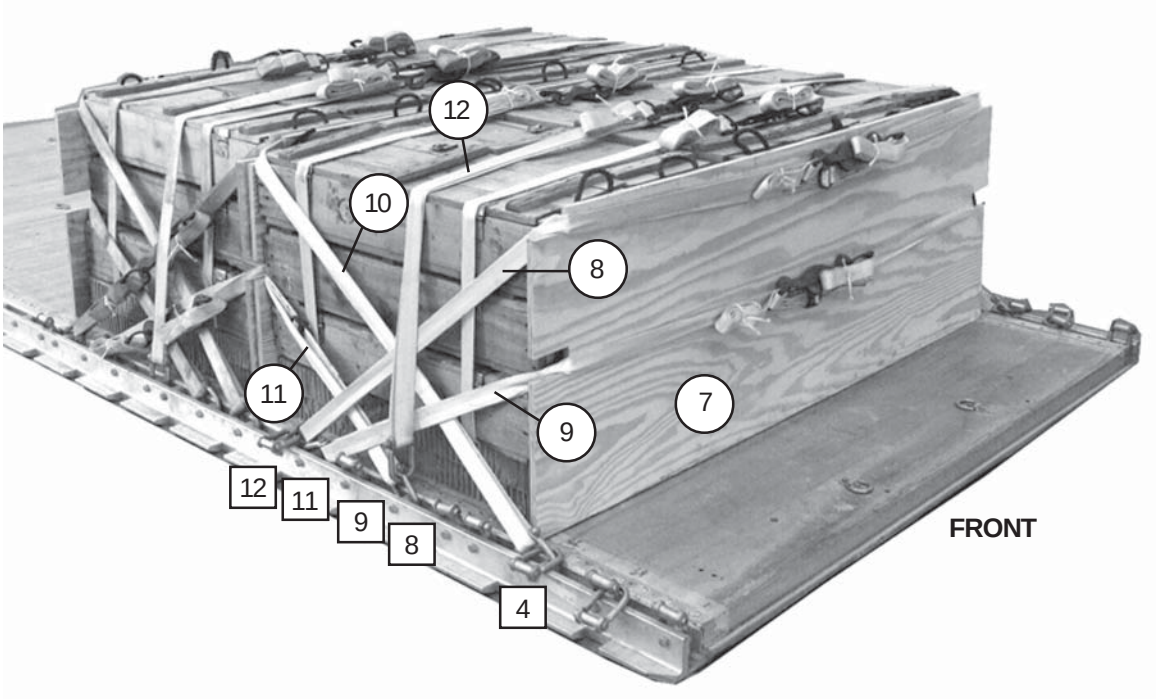

7 Set a fourth endboard against the front of the front stack of boxes.

8 Pass the ends of a 30-foot lashing through clevises 12 and 12A and through the top cutout in the front endboard. Secure the lashing in the center of the endboard with two D-rings and a load binder.

9 Pass the ends of a 30-foot lashing through clevises 11 and 11A and through the lower cutouts in the front endboard. Secure the lashing in the center of the endboard with two D-rings and a load binder.

10 Pass the ends of the pre-positioned 30-foot lashing through clevis 4 and through the upper cutouts in the rear endboard. Secure the lashing at the side of the load with two D-rings and a load binder.

11 Pass the ends of the pre-positioned 30-foot lashing through clevis 8 and through the upper cutouts in the endboard. Secure the lashing at the side of the load with two D-rings and a load binder.

12 Pass the ends of a 30-foot lashing through clevises 9 and 9A and over the top of the stack of boxes. Secure the lashing in the center of the boxes with two D-rings and a load binder.

Figure 6-5. Second Stack of Ammunition Lashed (Continued)

BUILDING AND PLACING HONEYCOMB STACKS

6-4. Build the honeycomb stacks as shown in Figures 6-6 through 6-8. Place them on the platform as shown in Figure 6-9.

Note: All measurements are given in inches.

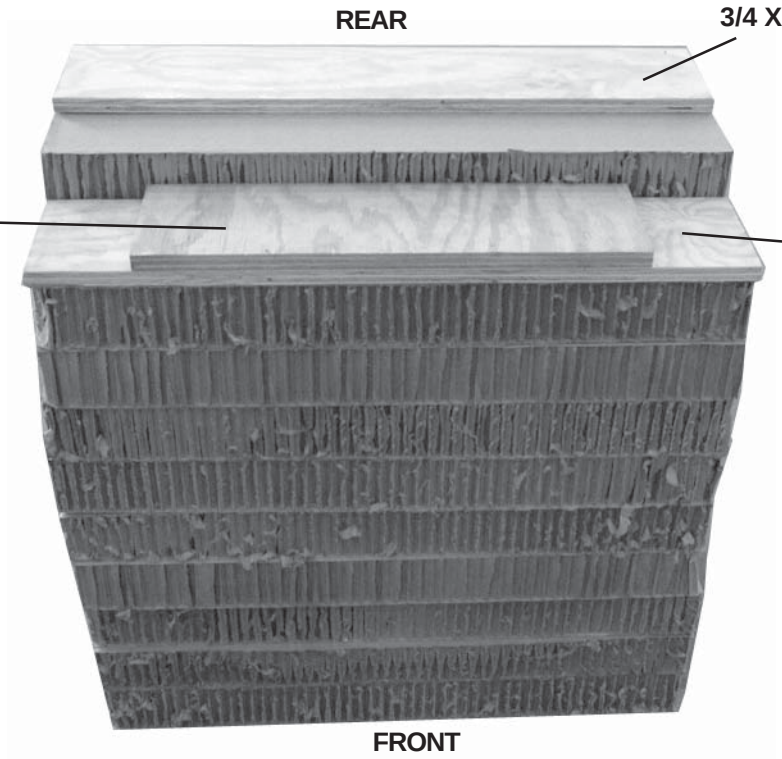

Stack Number	Pieces	Width (Inches)	Length (Inches)	Material	Instructions
1	9	30	16	Honeycomb	Glue together to form a stack.
	1	30	10	Honeycomb	Glue honeycomb even with rear edge of base.
	1	30	6	3/4-inch plywood	Glue plywood even with front edge of honeycomb.
	1	30	6	3/4-inch plywood	Glue plywood flush on rear edge of stack.
	1	21	6	3/4-inch plywood	Center and glue plywood on the front piece of plywood.

Figure 6-6. Honeycomb Stack 1 Prepared

Notes: 1. All measurements are given in inches.
2. This drawing is not drawn to scale.

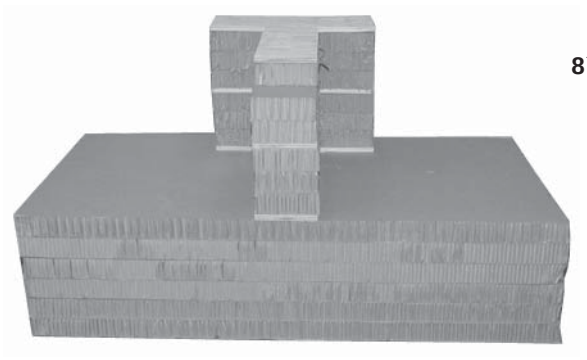

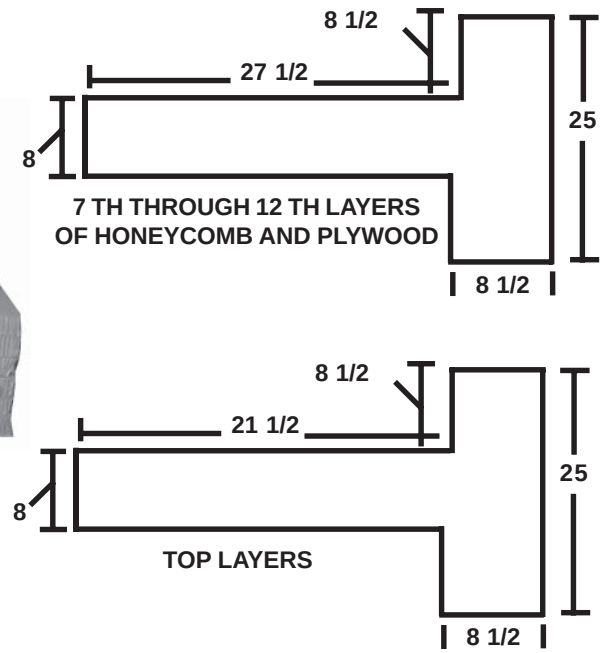

Stack Number	Pieces	Width (Inches)	Length (Inches)	Material	Instructions
2	6	72	36	Honeycomb	Glue together to form a stack.
	1	25	36	3/4-inch plywood	Make cutouts as shown, and glue flush with the front and centered on the honeycomb.
	3	25	36	Honeycomb	Make cutouts as shown, and glue flush on the plywood.
	1	25	36	3/4-inch plywood	Make cutouts as shown, and glue flush on the honeycomb.
	2	25	36	Honeycomb	Make cutouts as shown and place flush on the plywood.
	1	25	30	Honeycomb	Make cutouts as shown for the top layer, and place flush on the stack.
	1	25	30	3/4-inch plywood	Make cutouts as shown for the top layer, and place flush on the stack.

Figure 6-7. Honeycomb Stack 2 Prepared

Notes: 1. All measurements are given in inches.
2. This drawing is not drawn to scale.

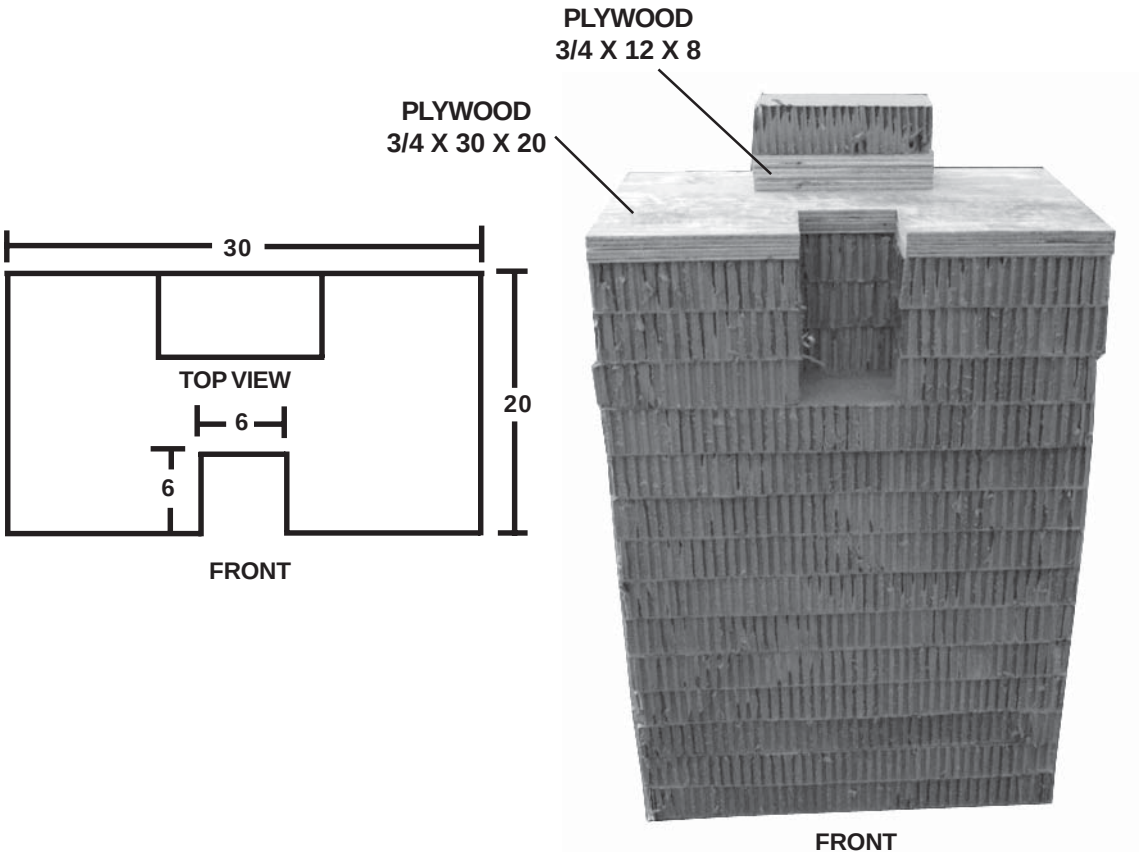

Stack Number	Pieces	Width (Inches)	Length (Inches)	Material	Instructions
3	11	30	20	Honeycomb	Form a stack.
	3	30	20	Honeycomb	Center a cut 6-inches wide and 6 - inches deep in a 30-inch side. Place these pieces flush on the stack with the cutouts to the front.
	2	30	20	3/4-inch plywood	Make same cuts as previously shown and glue on honeycomb.
	3	12	8	3/4-inch plywood	Glue the 12-inch sides flush along the rear edge and centered.
	1	12	8	Honeycomb	Glue flush over the plywood placed previously.

Figure 6-8. Honeycomb Stack 3 Prepared

Notes: 1. All measurements are given in inches.
2. This drawing is not drawn to scale.

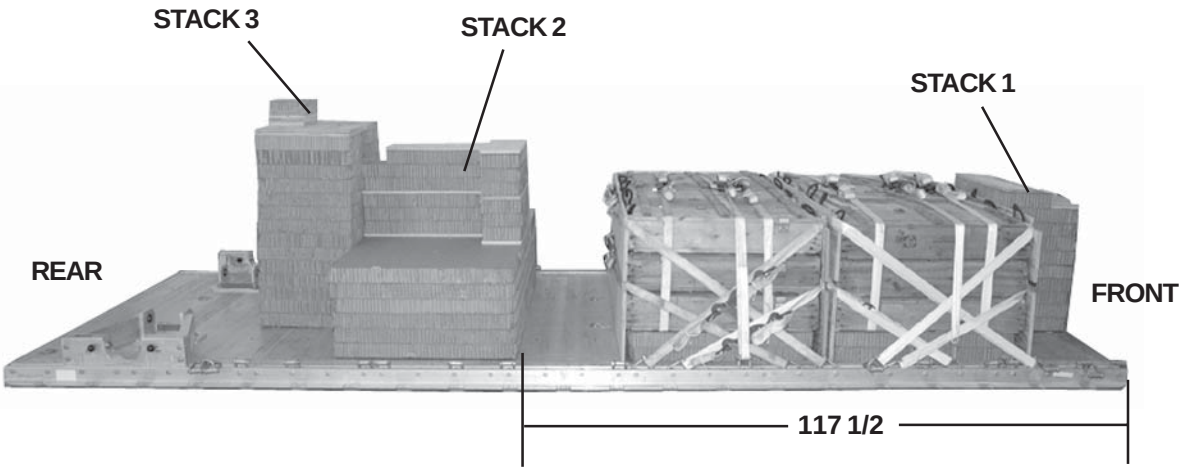

Stack Number	Position of Stack on Platform
	Place stack:
1	Centered flush with the front edge of the platform.
2	Centered 117 1/2 inches from the front edge of the platform.
3	Centered flush against stack 2.

Figure 6-9. Honeycomb Stacks Placed on Platform

PREPARING HOWITZER

6-5. Prepare the howitzer as shown in Figures 6-10 through 6-19.

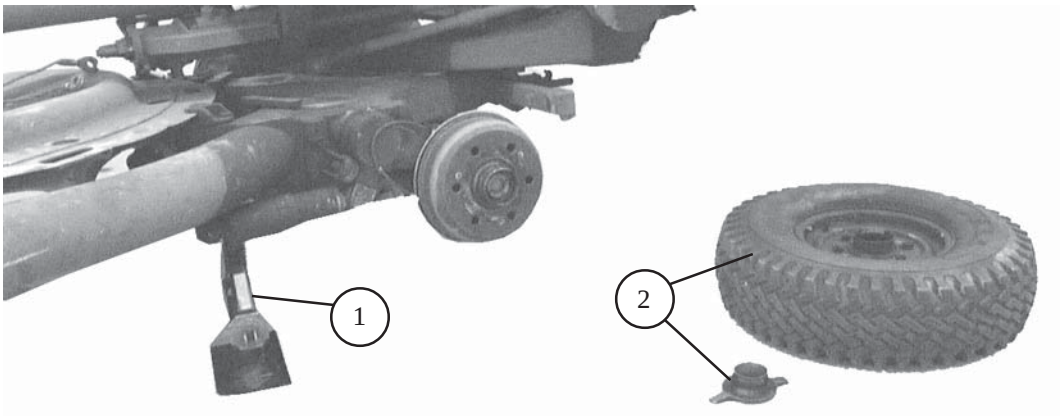

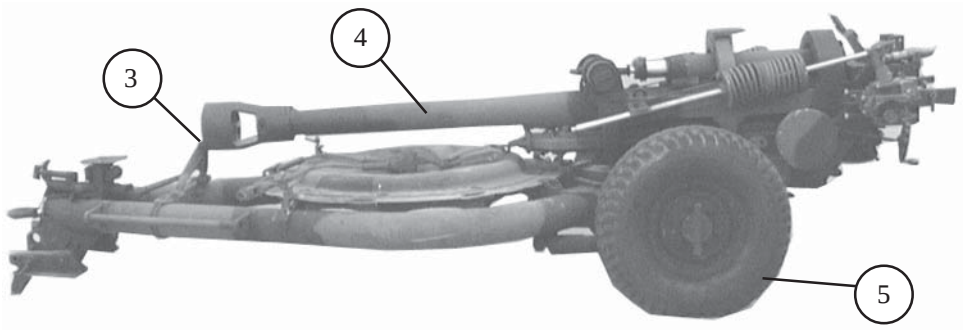

1. Install the jack.
2. Use the mallet to remove the wheel hub and the right front wheel.
3. Place the traveling stay in its locking bracket.
4. Traverse the barrel to the rear until it is centered between the trails.
5. Replace the wheel and hub. Stow the jack and mallet in their bracket on the left side of the gun.

Figure 6-10. Howitzer Placed in Travel Position

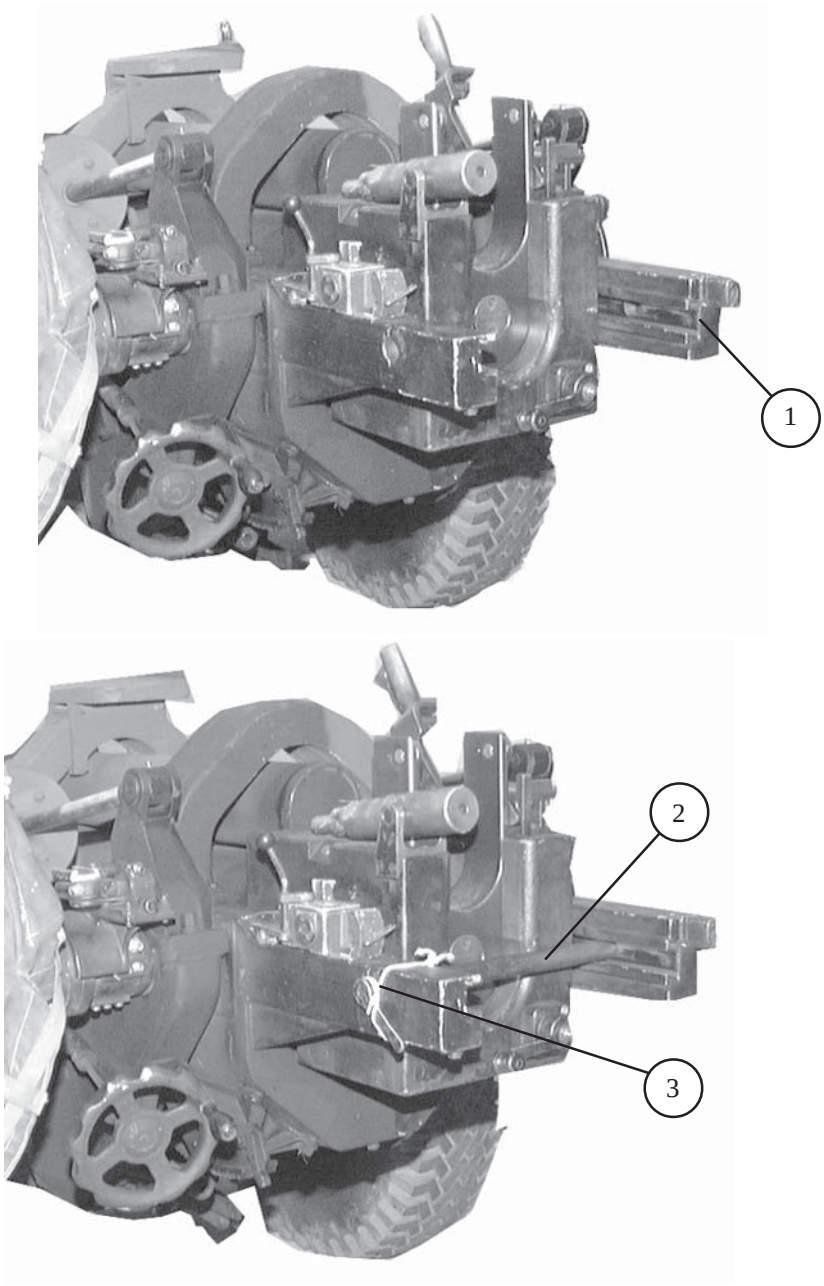

1. Remove the run back stop bar from its storage hole on the right rail. (Bar shown stowed.)
2. Insert the bar from the left side into the holes provided in both rails.
3. Secure the left end of the bar to the left rail with type III nylon cord.

Figure 6-11. Run Back Stop Bar Secured Across Breech

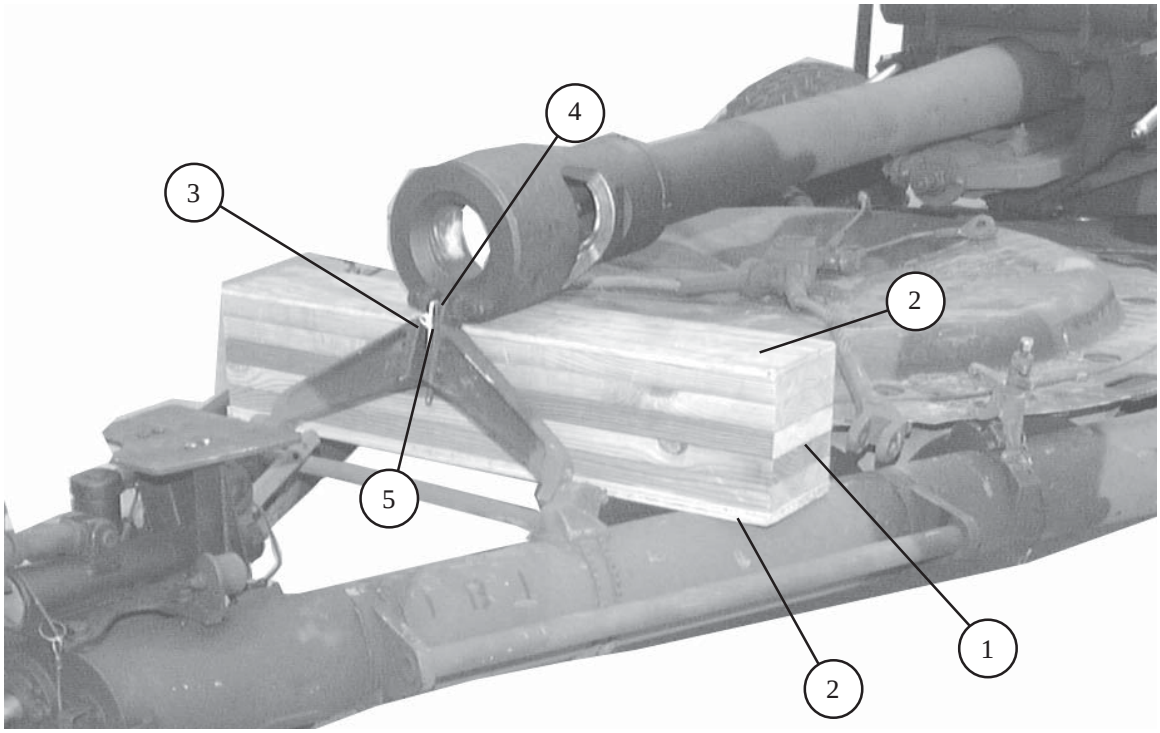

1 Use 20d nails to nail five 2- by 8- by 40-inch pieces of lumber flush together.

2 Cut a 3/4- by 7 1/2- by 40-inch piece and a 1/2- by 7 1/2- by 40-inch piece of plywood. Nail one piece flush to each side of the stack of boards.

Note: Be sure that the wood support fits snugly under the muzzle brake when the latch bracket is in place. Adjust the plywood thickness, if necessary, to ensure a snug fit.

3 Center the support on the trails under the muzzle brake. Align the rear edge of the support with the edge of the muzzle brake.

4 Swing the latch bracket assembly up to the muzzle brake. Lock the latch bracket assembly to the fitting on the muzzle brake.

5 Secure the latch bracket with type III nylon cord.

Figure 6-12. Muzzle Brake Support Constructed and Placed

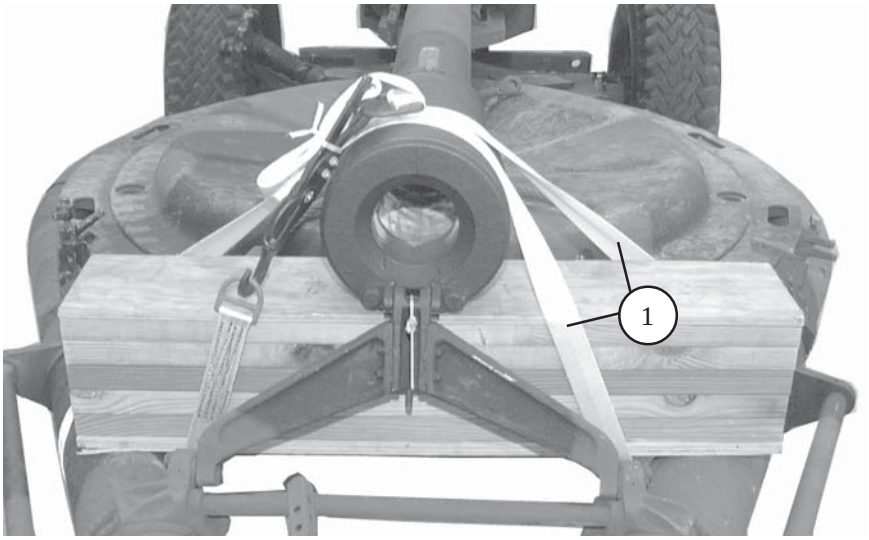

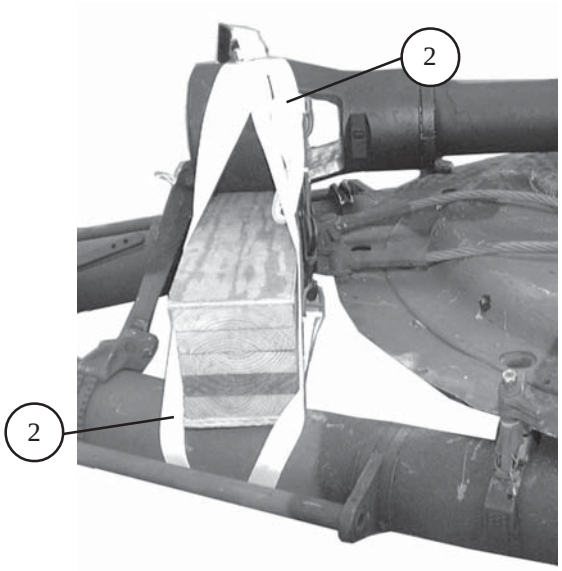

1 Run a 15-foot lashing from the front of the support, around the left trail, behind the support, over the muzzle brake, in front of the support, under the right trail, and over the muzzle brake. Secure it on the left side of the muzzle brake with a D-ring and a load binder.

2 Beginning behind the support on the right side, run a 15-foot lashing under the right trail, in front of the support, up over the muzzle brake, behind the support, under the left trail, and over the muzzle brake. Secure it on the right side and behind the support with a D-ring and a load binder.

Figure 6-13. Muzzle Brake Support Secured

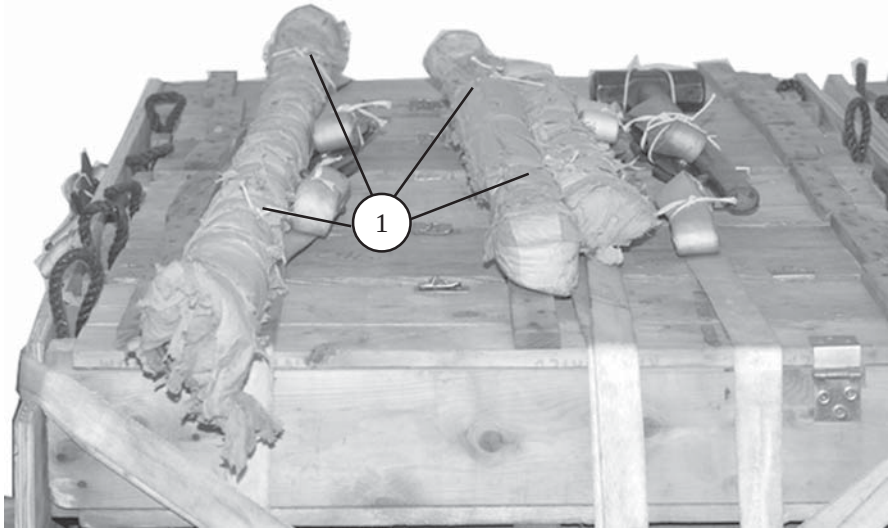

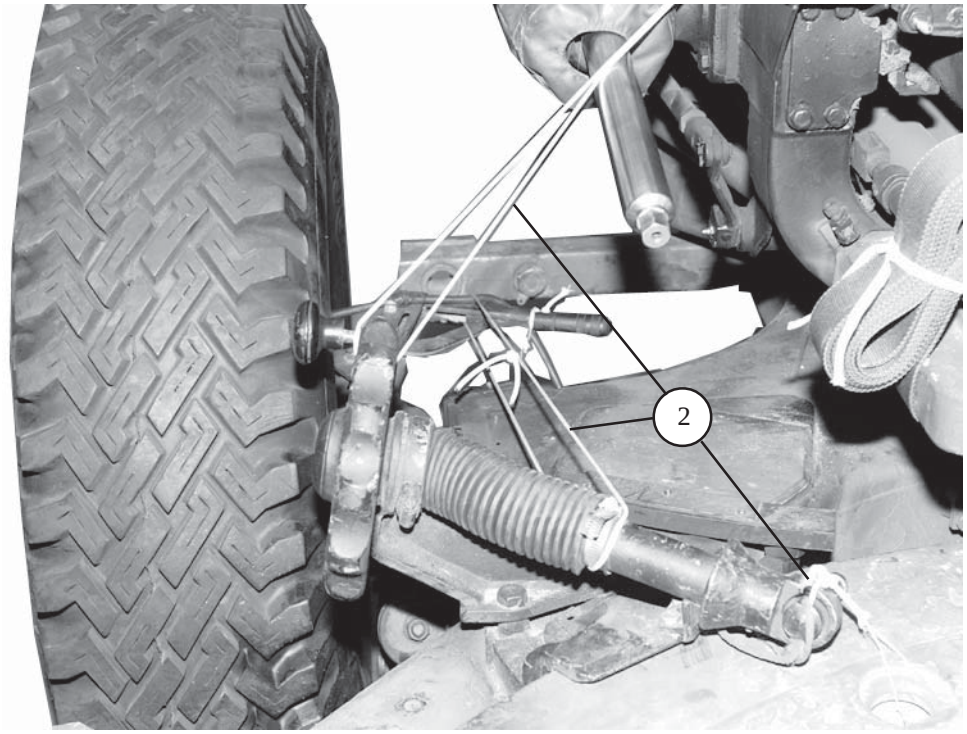

1 Wrap the aiming poles, trail lifting bar, rammer staff, and barrel brush with cellulose wadding. Tie them to the rear ammunition box lashing with type III nylon cord.

2 Remove the traversing wheel (not shown). Secure it to its bracket on the left trail with type III nylon cord.

Figure 6-14. Howitzer Equipment Stowed

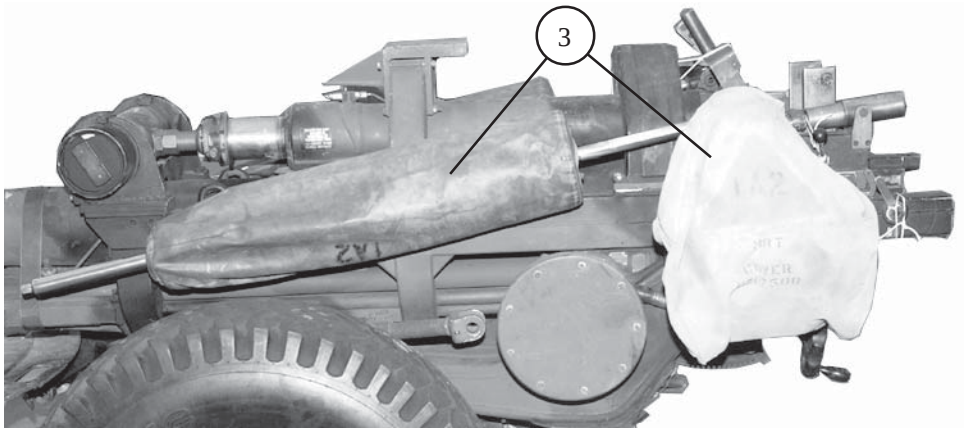

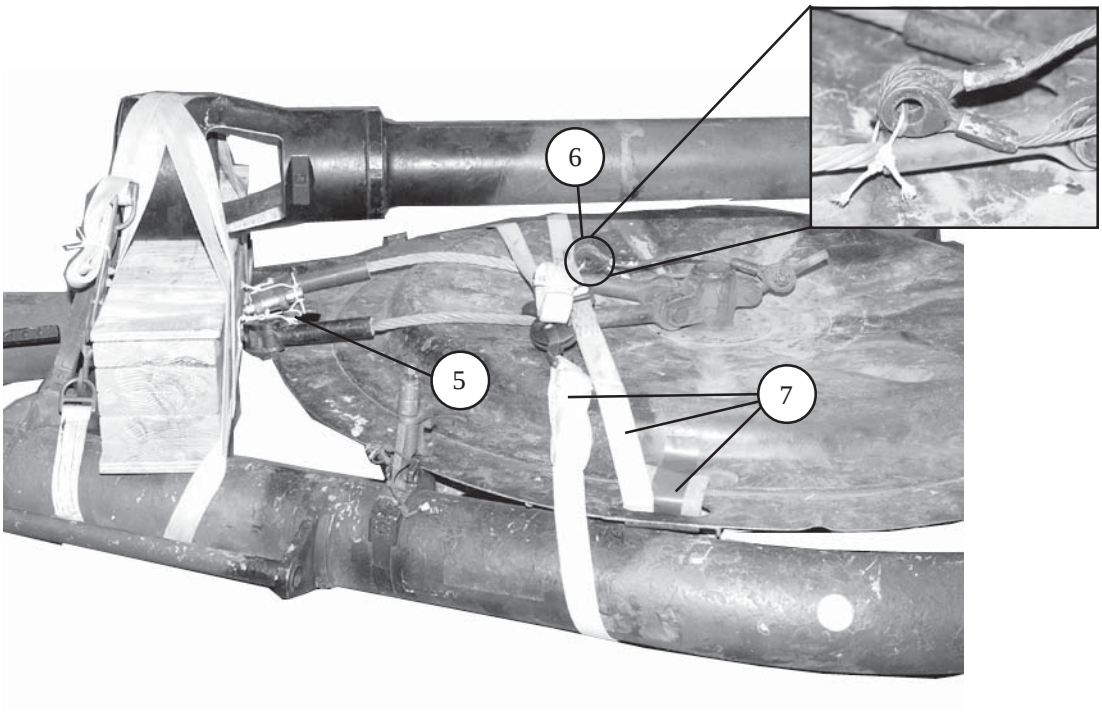

3 Cover the sights, and recoil springs with the covers provided.

4 Tie the jack and mallet in their storage bracket with type III nylon cord. (Not shown)

5 Tie the large firing stay cables to the rear firing platform hole with type III nylon cord.

6 Tie the smaller firing stay cables to the large firing stay cables with type III nylon cord.

7 Pad the rear side firing platform holes with 11- by 5-inch felt taped in place. Secure a 15-foot lashing through both holes, around the trails, and over the firing platform.

Figure 6-14. Howitzer Equipment Stowed (Continued)

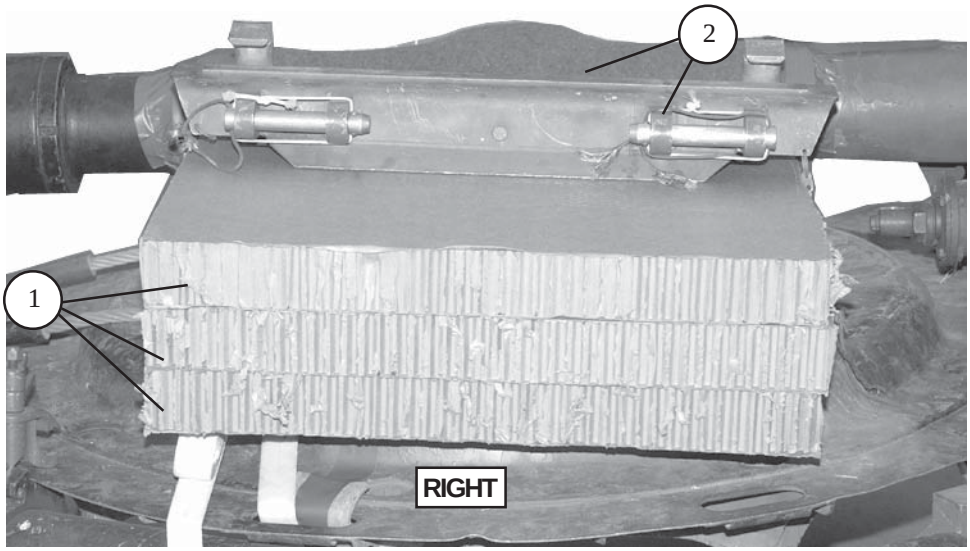

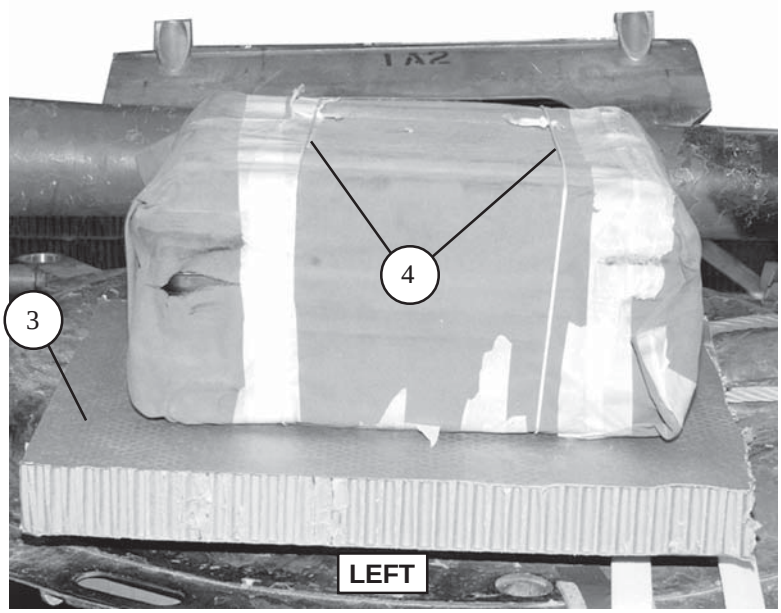

1. Place a stack of three 25- by 36-inch pieces of honeycomb on the right side of the firing platform against the gun tube.
2. Lay an 8- by 36-inch piece of felt against the barrel. Place the field spade against the felt.
3. Place a 25- by 36-inch piece of honeycomb lengthwise on the firing platform on the left side of the gun tube.
4. Wrap the gunner's sight box, tool bag, and camouflage net in the tarpaulin. Tie the bundle securely with type III nylon cord, and place it on the honeycomb.

Figure 6-15. Howitzer Equipment Stowed on Firing Platform

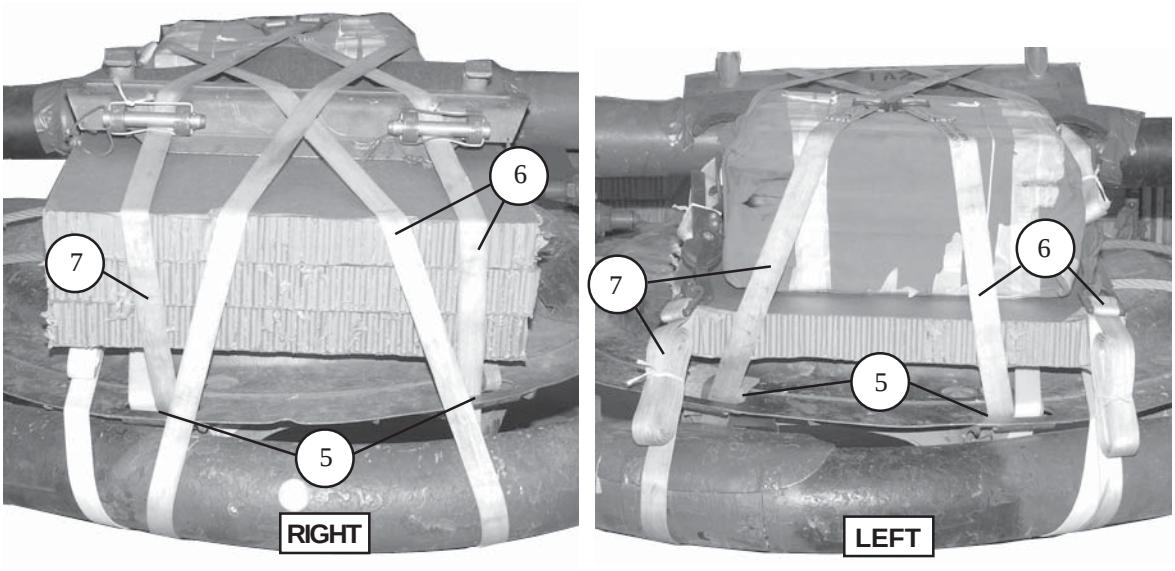

(5) Pad the remaining side firing platform lifting holes on the firing platform with two 5- by 11-inch pieces of felt.

(6) Form two 30-foot lashings according to Chapter 3 of this manual. Lay a 30-foot lashing diagonally across the items stowed on the firing platform. Pass one end through the field spade hinge and firing platform lifting hole directly below, and around the right trail. Pass the other end over the tarpaulin, down through the nearest firing platform lifting hole, and around the left trail. Bring both free ends to the top of the load, and secure them over the tarpaulin with two D-rings and a load binder.

(7) Pass the end of another 30-foot lashing through the second field spade hinge and down through the firing platform lifting hole directly below, and around the right trail. Pass the other end over the tarpaulin, down through the remaining firing platform lifting hole, and around the left trail. Bring both free ends to the top of the load, and secure them as in step 6.

Figure 6-15. Howitzer Equipment Stowed on Firing Platform (Continued)

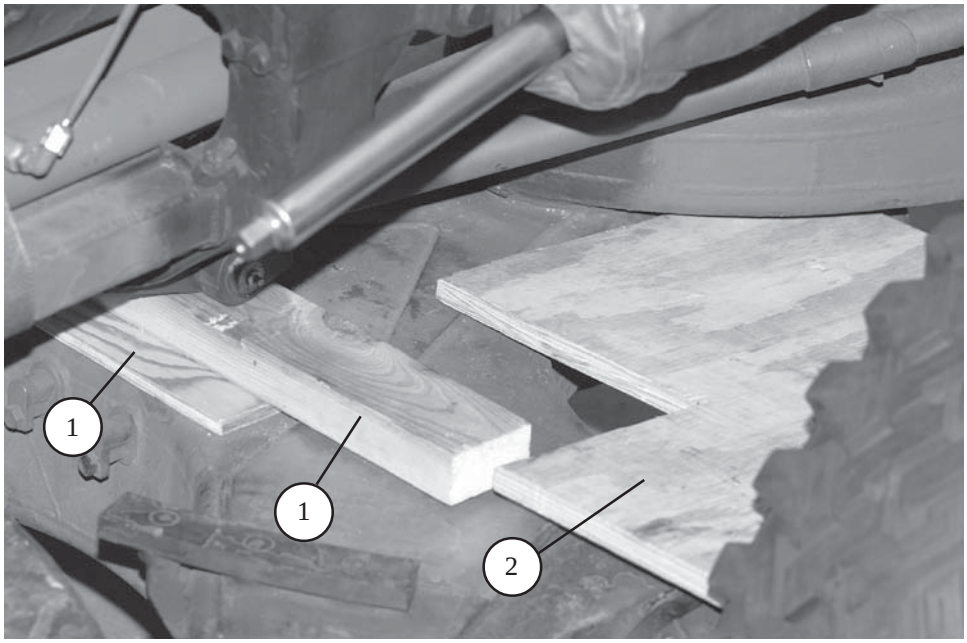

Notes: 1. All measurements are given in inches.
2. This drawing is not drawn to scale.

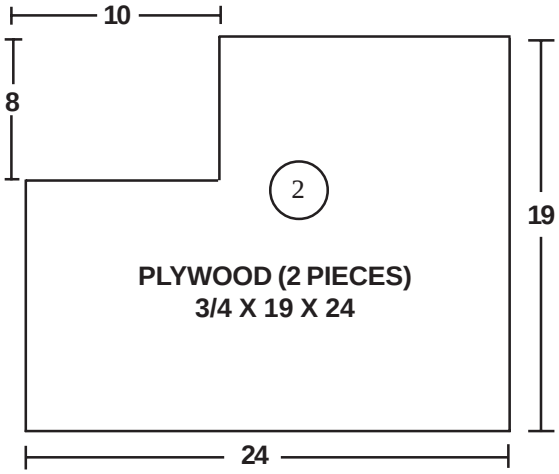

(1) Center a 1/2- by 10 1/2- by 6-inch piece of plywood directly under the hinge of the traveling stay. Center a 2- by 4- by 24-inch piece of lumber over the plywood.

(2) Place a 3/4- by 19- by 24-inch piece of plywood with a 10- by 8-inch cutout on each side of the piece of lumber. See the line drawing for details.

Note: Be sure that the wood support fits snugly between the traveling stay and the carriage. Adjust the plywood thickness, if necessary, to ensure a snug fit.

Figure 6-16. Wood Under Buffer Assembly Secured

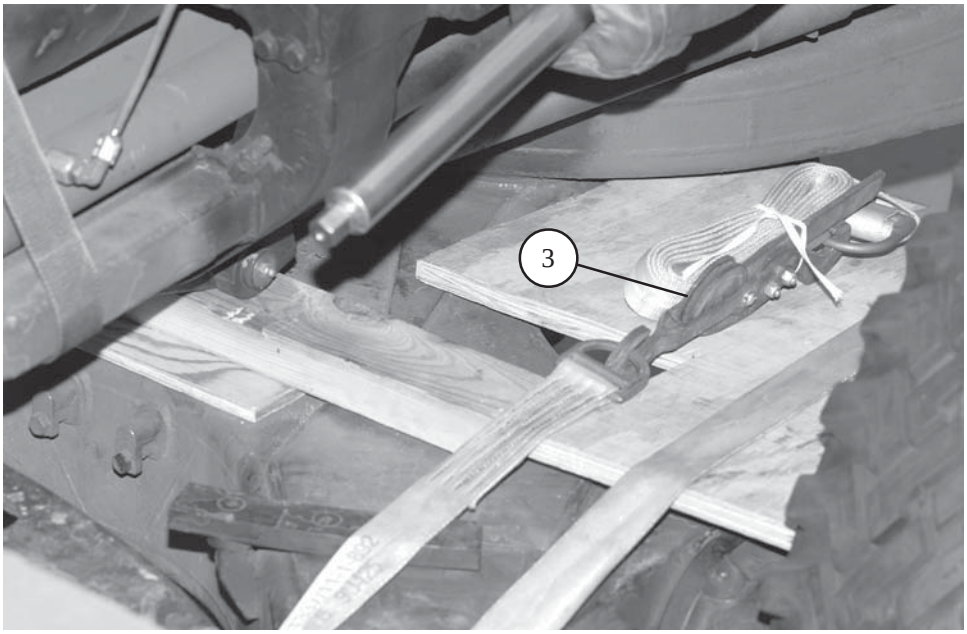

3 Pad the front firing platform hole with cellulose wadding. Pass a 15-foot lashing through the hole, over the lumber placed earlier, and around the brake light bar. Secure the lashing on top with a D-ring and a load binder.

4 Repeat steps 2 and 3 on the left side, using the same firing platform hole. (Not shown)

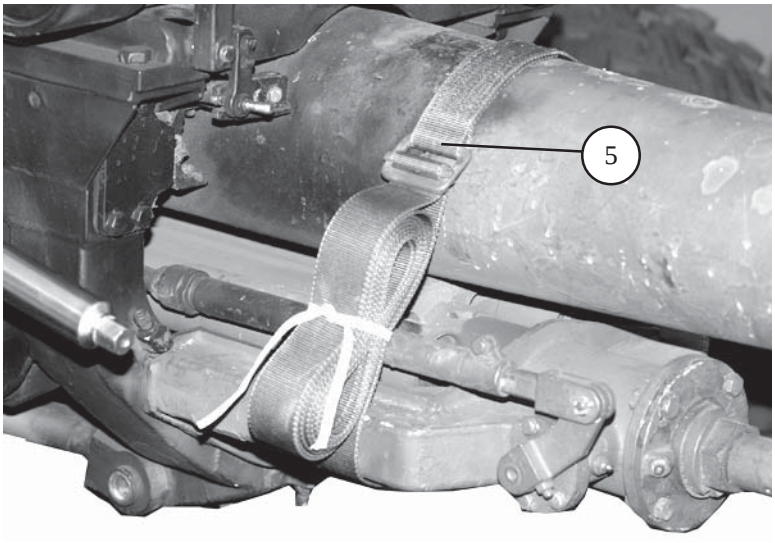

5 Pass an A7A cargo strap around the barrel and under the buffer assembly. Secure the strap with its friction adapter. Tie the excess strap with Type I,1/4-inch cotton webbing.

Figure 6-16. Wood Under Buffer Assembly Secured (Continued)

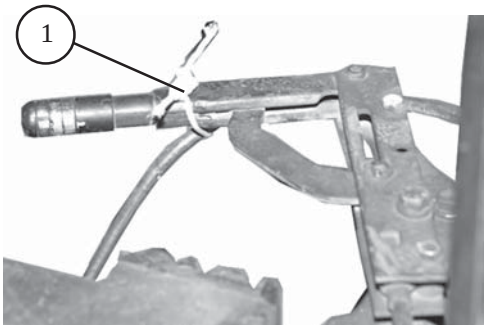

1. Tie the brake lines to the brake handle with type III nylon cord.
2. Secure all levers and pins with type III nylon cord (not shown).

Figure 6-17. Brake Lines Secured to Brake Handle

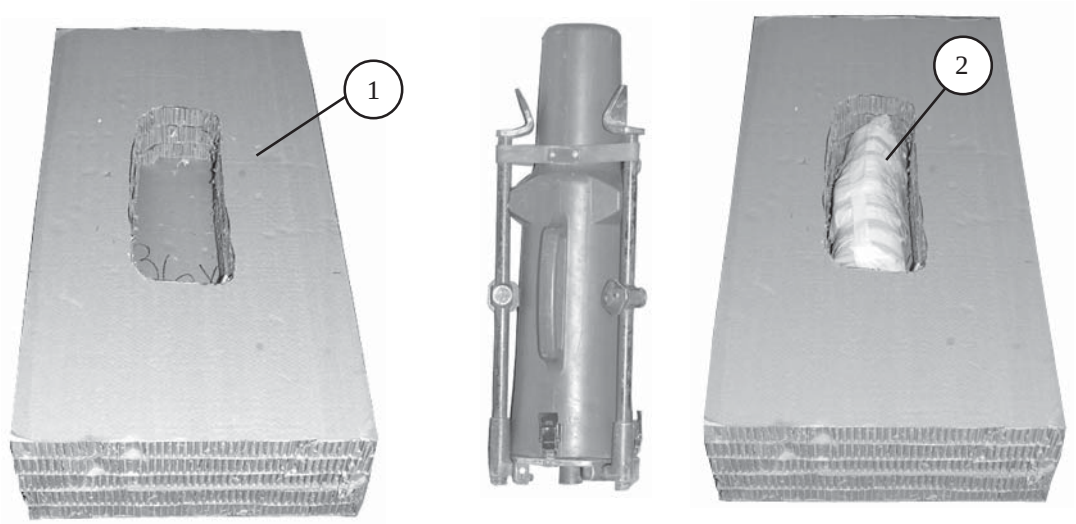

1. Cut seven 36- by 70-inch pieces of honeycomb. Center a cutout in three of the pieces to fit the collimator. Glue the three pieces with the cutouts flush over two solid piece of honey comb.
2. Pad the collimator generously with cellulose wadding, tape, and place it in the collimator box.
3. Glue the remaining two pieces of honeycomb together. Center and glue on top of the five pieces of honeycomb containing the collimator (not shown).

Figure 6-18. Collimator Stowed

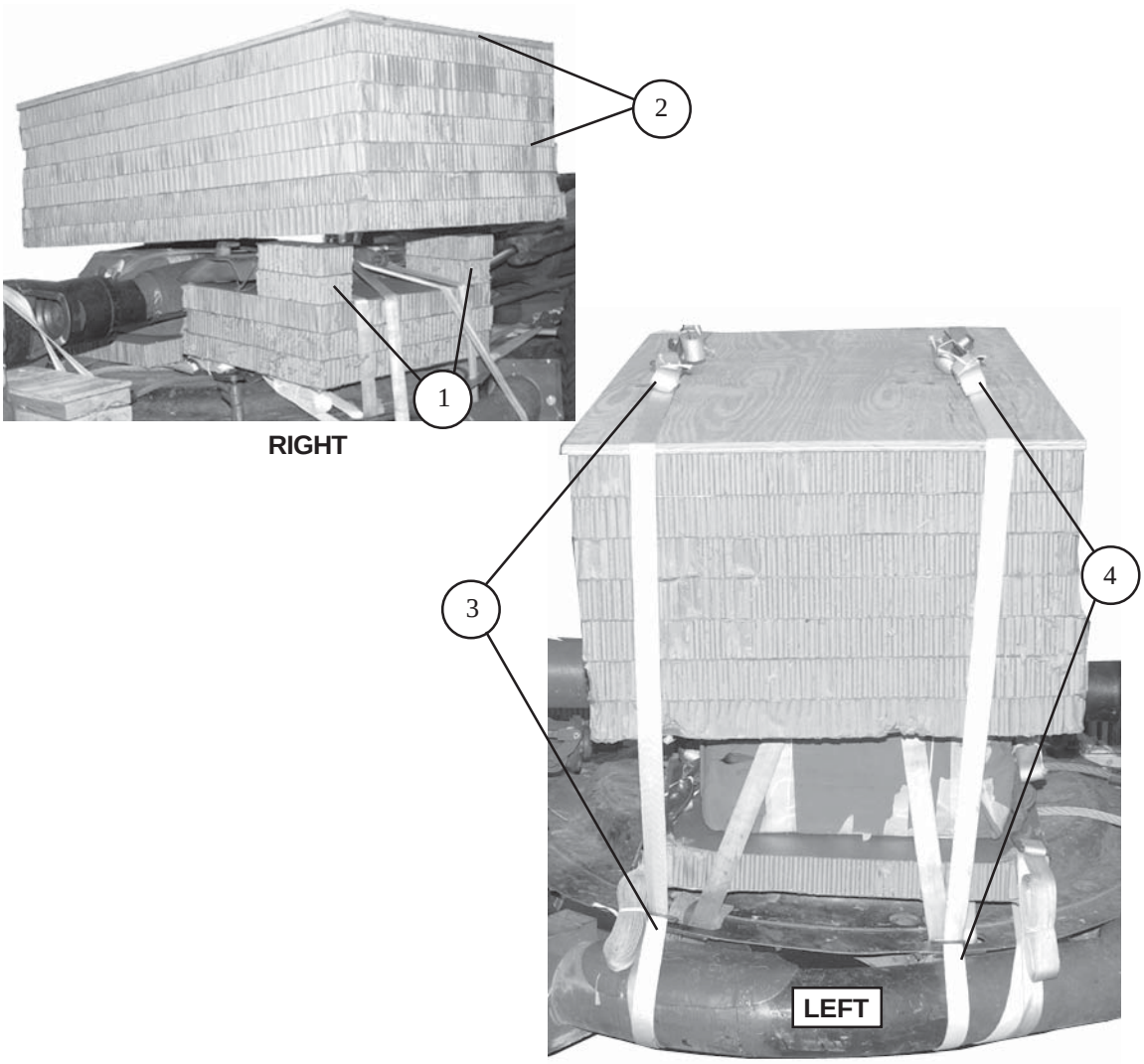

1. Cut four 5- by 10-inch pieces of honeycomb. Glue two pieces together to form two stacks. Glue the two pieces on top of the right corners of the honeycomb on top of the firing platform.

2. Center the collimator box across the gun tube and the firing platform. Cut and place a 36-inch by 70-inch piece of 3/4-inch plywood on top of the collimator box.

3. Route a lashing through the left front firing platform lifting hole, around the trail, and through its own D-ring. Repeat for the right front side and secure the running ends together on top of the collimator box with two D-rings and a load binder.

4. Route a lashing through the left rear firing platform lifting hole, around the trail, and through its own D-ring. Repeat for the right rear side and secure the running ends together on top of the collimator box with two D-rings and a load binder.

Figure 6-19. Collimator Box Secured to Load

LIFTING AND POSITIONING HOWITZER

6-6. Lift the howitzer and position it on the honeycomb stacks as shown in Figure 6-20.

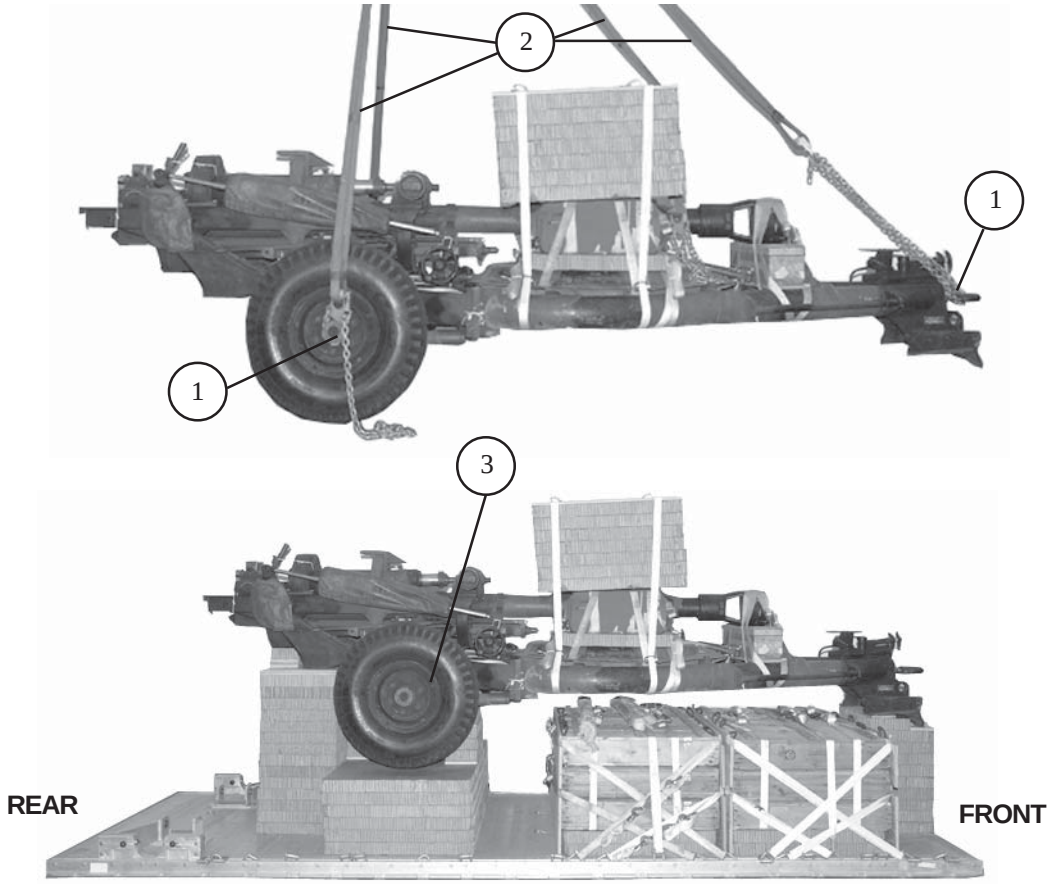

(1) Wrap 10,000-pound chains around the wheel hubs, and run a 10,000-pound chain through the lunette.

(2) Attach hooks to the ends of three 11-foot (2-loop), type XXVI nylon slings, and hook the slings to the chains. Adjust the chains, as necessary, to ensure that the howitzer remains level when lifted.

Note: The hooks shown are not standard items. Other hooks available at the rigging facility may be used.

(3) Center the howitzer on the platform, and on the stacks as shown.

Figure 6-20. Howitzer Lifted and Positioned on Platform

STOWING FUSE BOXES

6-7. Stow six fuse boxes on the back of the platform as shown in Figure 6-21.

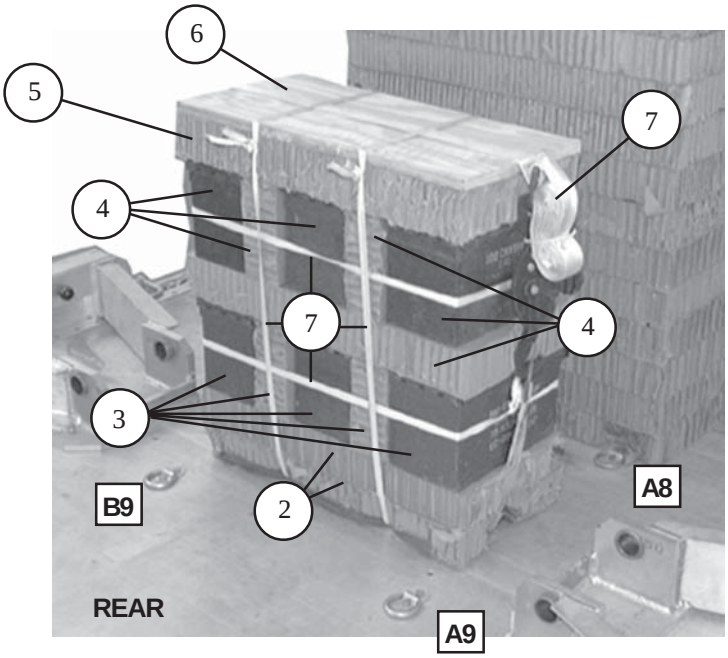

1. Preposition a lashing across the platform centered between deck rings A8 and A9. (Not shown)
2. Form two layers of 12- by 25-inch honeycomb as the base and center them between deck rings A and B.
3. Place three fuse boxes on top of the layers with two pieces of 7- by 12-inch honeycomb as inserts.
4. Place another layer of 12- by 25-inch honeycomb on top of the fuses and place three more boxes of fuses with two pieces of 7- by 12-inch honeycomb as inserts.
5. Place a final layer of 12- by 25-inch honeycomb on top of the fuses.
6. Place a 3/4- by 12- by 25-inch piece of plywood on top of the honeycomb to complete the stack.
7. Secure the stack with four pieces of 1/2-inch tubular nylon. Route the prepositioned lashing lengthwise around the stack and secure with a D-ring and load binder on the right side of the fuse box stack.

Figure 6-21. Fuse Boxes Stowed

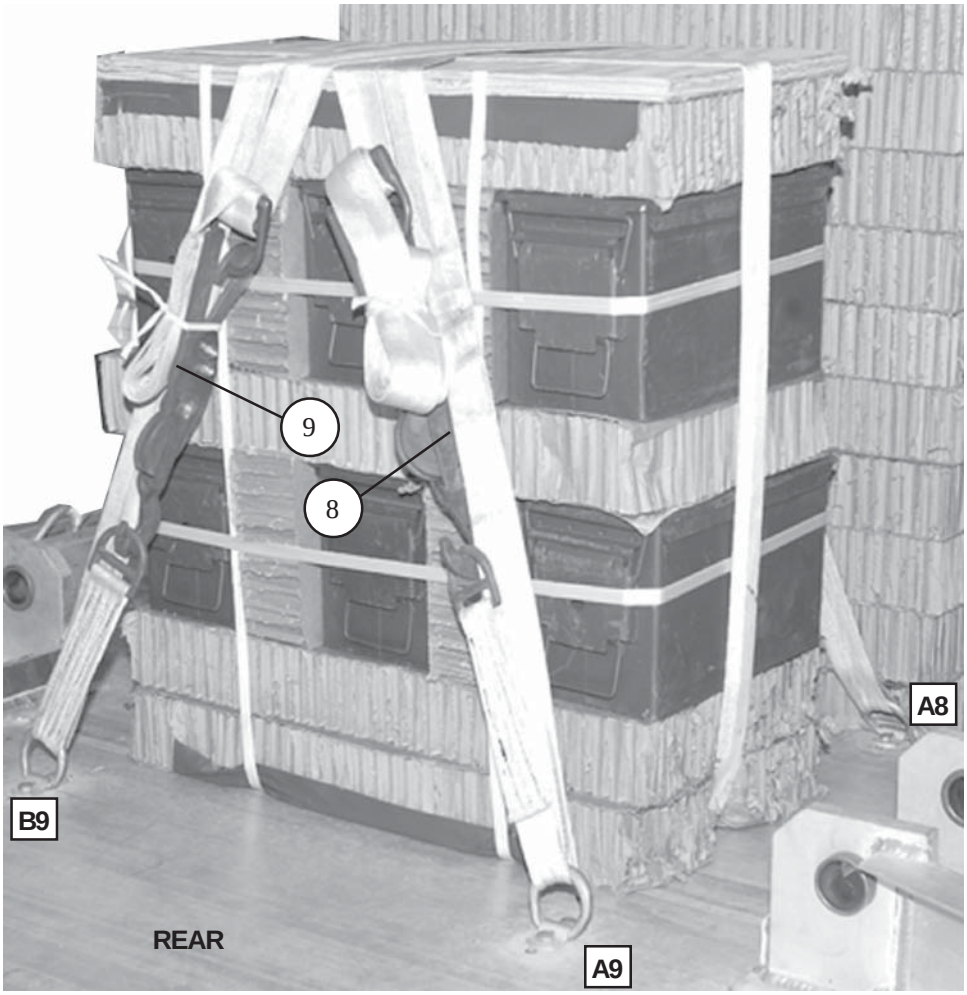

(8) Route a lashing through deck ring A9, over the stack, through deck ring B8, and back over the stack toward A9. Secure with a D-ring and load binder.

(9) Route a lashing through deck ring B9, over the stack, through deck ring A8, and back over the stack toward B9. Secure with a D-ring and load binder.

Figure 6-21. Fuse Boxes Stowed (Continued)

BUILDING AND PLACING THE ATTITUDE CONTROL SYSTEM (ACS) BRIDGE SUPPORT

6-8. Build the ACS bridge support as shown in Figure 6-22. Place the ACS bridge support on the load as shown in Figure 6-23.

Note: All measurements are given in inches.

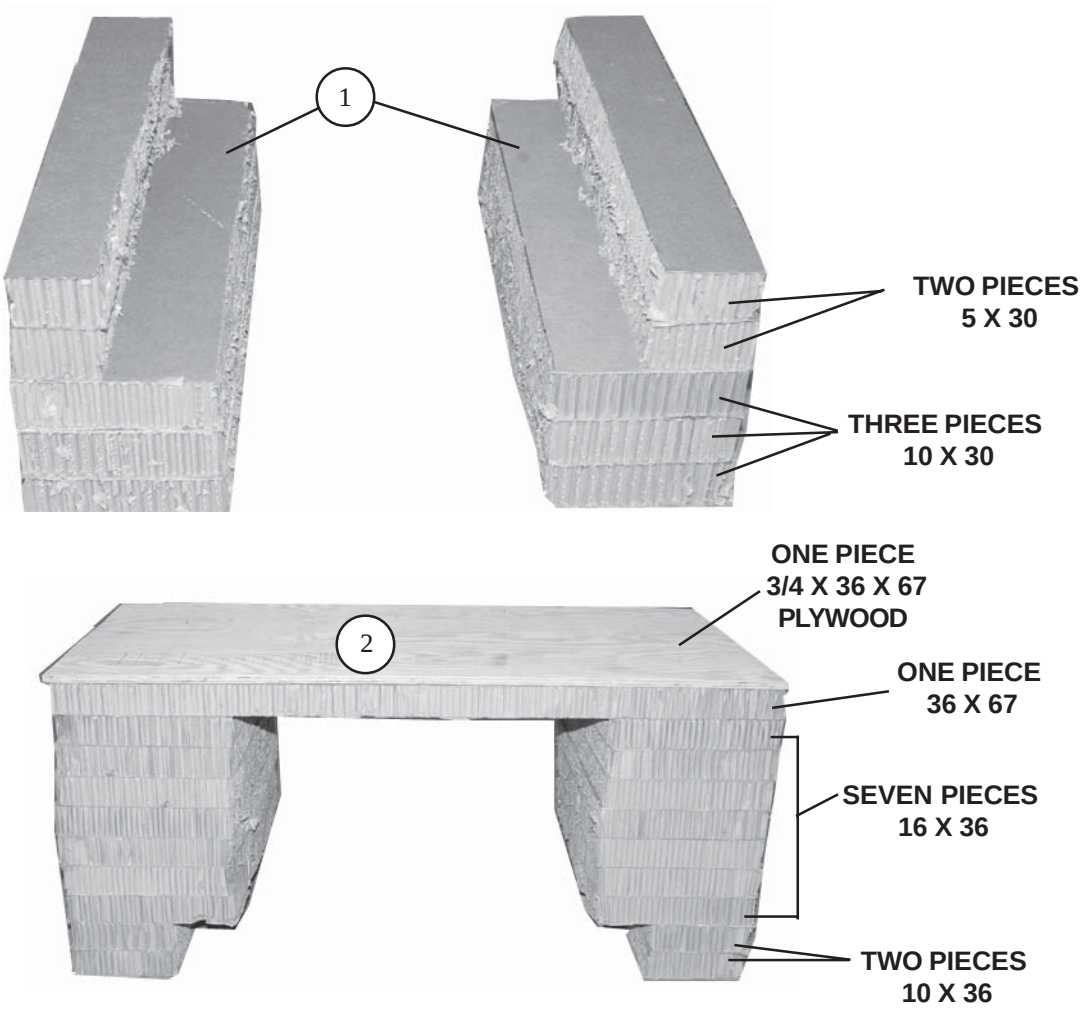

(1) Build two honeycomb stacks to be placed next to the wheels of the howitzer as shown above.

(2) Build one honeycomb stack to be placed on top of the stacks built in step 1.

Figure 6-22. ACS Bridge Support Stacks Built

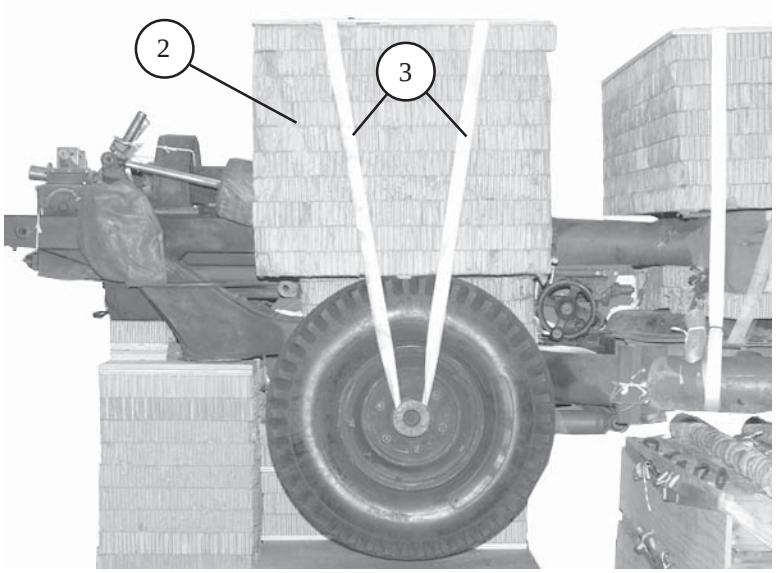

1. Place the two smaller honeycomb stacks previously built next to the inside of each wheel.
2. Place the larger stack on top of the stacks in step 1.
3. Form a 30-foot lashing and route the free ends around the wheel hubs and secure on top with two D-rings and a load binder.

Figure 6-23. ACS Bridge Support Stacks Placed on Load

LASHING HOWITZER

6-9. Lash the howitzer to the platform as shown in Figures 6-24 and 6-25. Install and safety the lashings according to Chapter 3 of this manual.

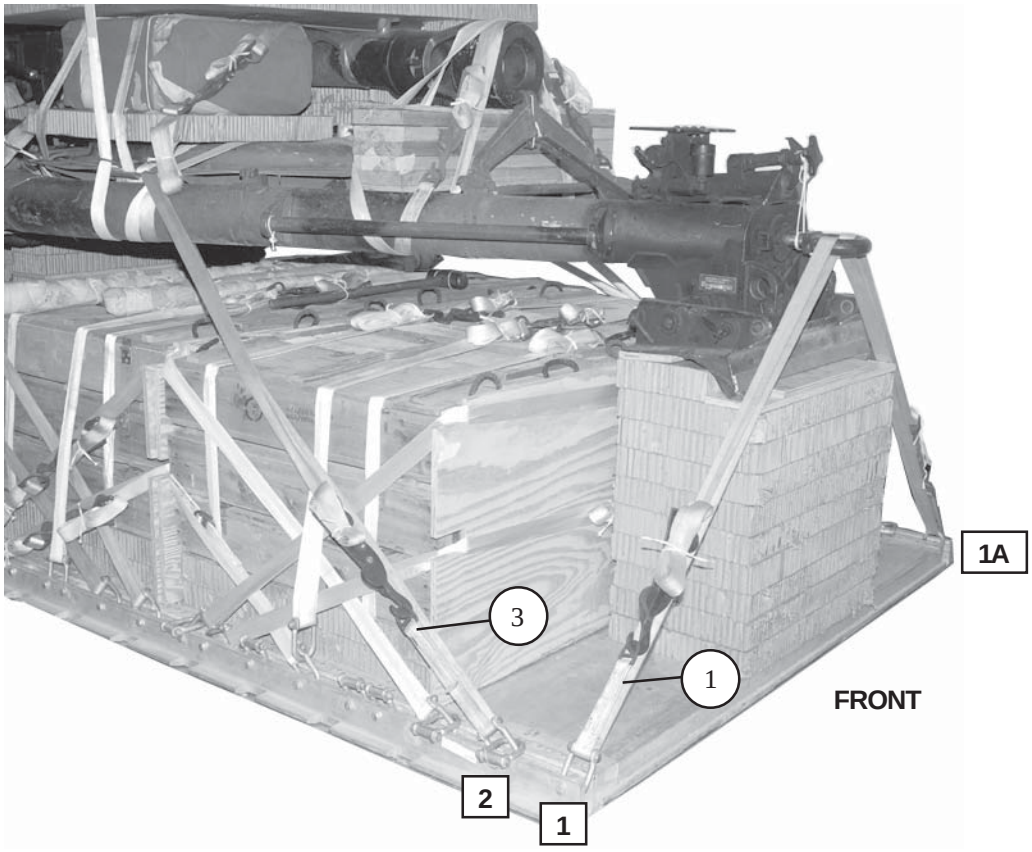

Lashing Number	Tiedown Clevis Number	Instructions
		Pass lashing:
1	1	Through lunette, right side.
2	1A	Through lunette, left side.
3	2	Through hole in firing platform and around trail, right side.
4	2A	Through hole in firing platform and around trail, left side.

Figure 6-24. Lashings 1 through 4 Installed

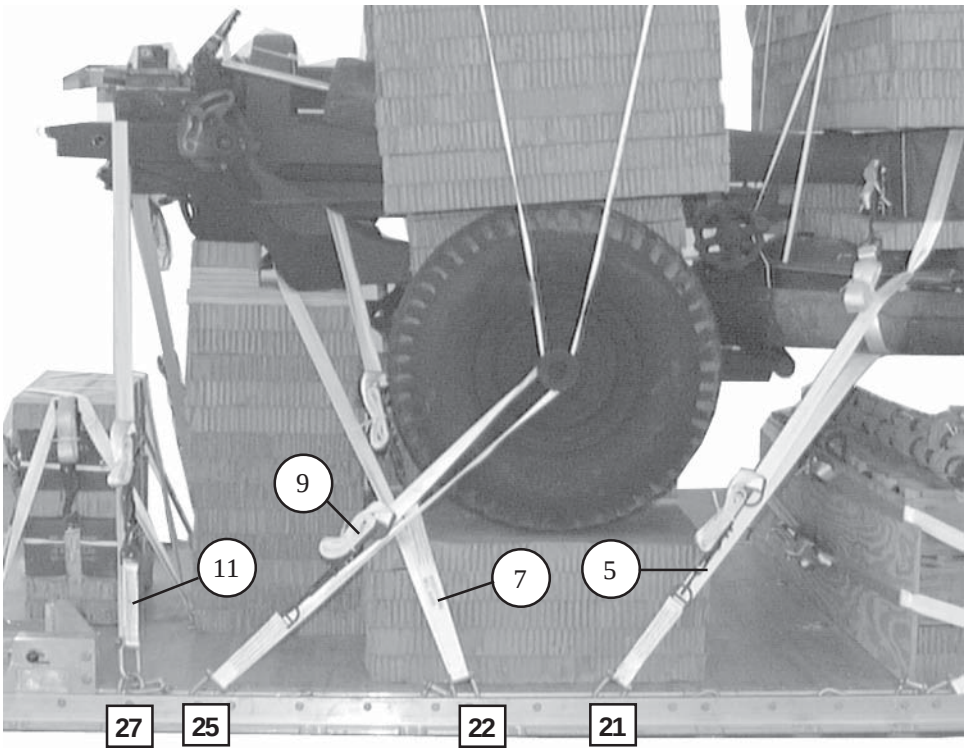

Lashing Number	Tiedown Clevis Number	Instructions
		Pass lashing:
5	21	Through hole in firing platform and around trail, right side.
6	21A	Through hole in firing platform and around trail, left side.
7	22	Around the arm, near the tire, right side.
8	22A	Around the arm, near the tire, left side.
9	25	Around the wheel hub, right side.
10	25A	Around the wheel hub, left side.
11	27	Around rail, right side.
12	27A	Around rail, left side.

Figure 6-25. Lashings 5 through 12 Installed

INSTALLING ACS AND SUSPENSION SLINGS

6-10. Construct, inspect, and position the ACS according to Chapter 3, and as shown in Figure 6-26. Install the suspension slings and secure ACS according to Chapter 3, and as shown in Figure 6-27.

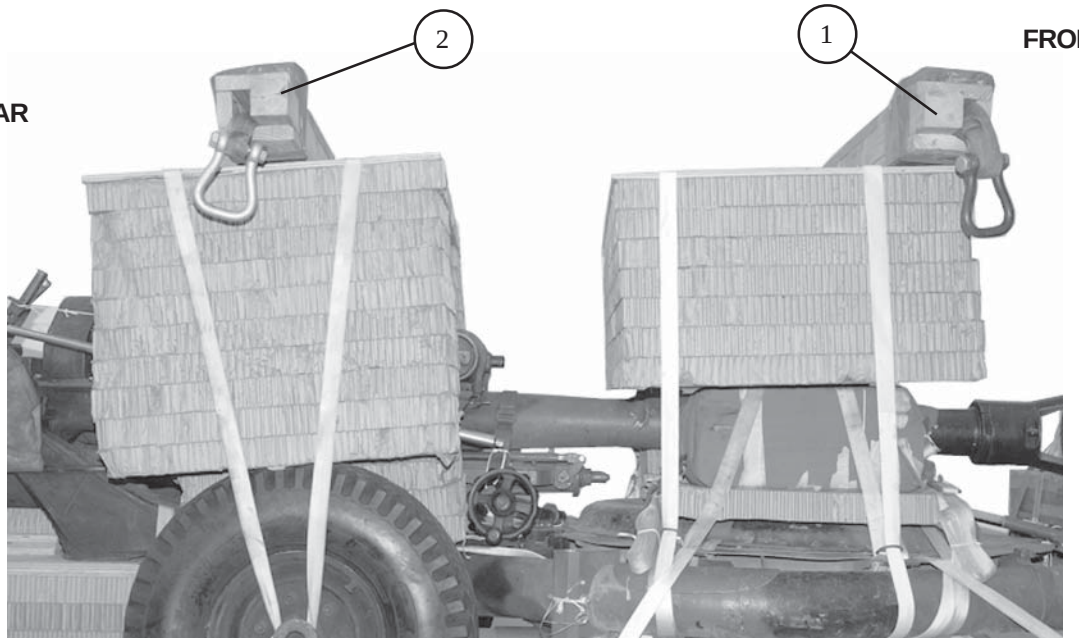

1 Center the front ACS flush to the front of the honeycomb stack containing the collimator. The ACS 4- by 4-inch lumber must face the rear of the platform.

2 Center the rear ACS on the rear ACS support stacks in the middle with the 4- by 4-inch lumber facing the front of the platform.

CAUTION
Ensure the ACS is centered on the load

Figure 6-26. Attitude Control System Positioned

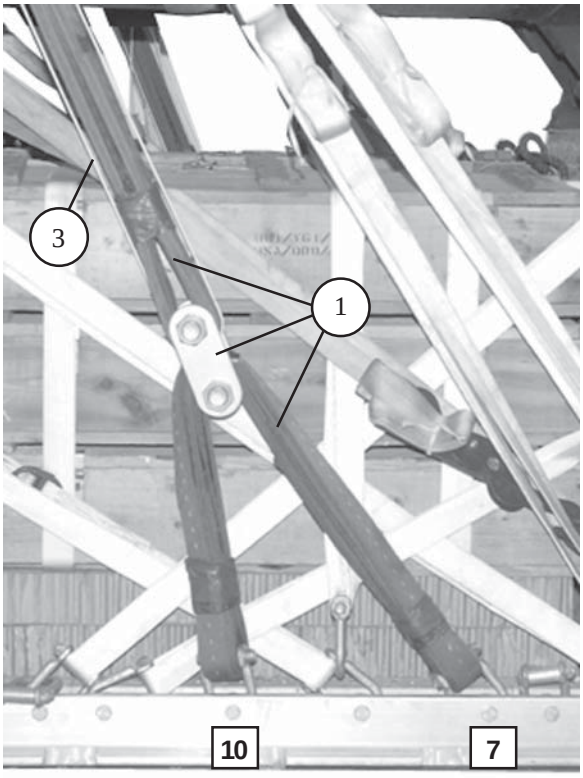

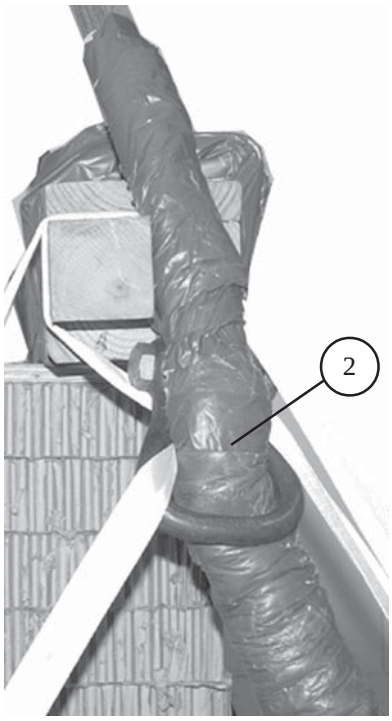

1. Install a 3-foot (4-loop), type XXVI nylon sling to clevises 7 and 10. Connect an 11-foot (4-loop), type XXVI nylon sling to the center of the 3-foot sling with a 3 3/4-inch two point link.

2. Route the sling through the clevis on the ACS from front to rear. Pad and tape the 11-foot sling with felt from a point 6 inches below the clevis to a point 6 inches above the top of the ACS.

3. Safety tie the 3 3/4-inch two-point link to the ACS clevis with a loop of type III nylon cord. Ensure the tie is tight.

4. Install a 3-foot (4-loop), type XXVI nylon sling to the other end of the 11-foot sling with a 3 3/4-inch two point link. Pad and tape the link with felt (not shown). See Chapter 3.

5. Repeat steps 1 through 4 on the left side of load using clevises 7A and 10A.

Figure 6-27. Slings Installed and ACS Secured

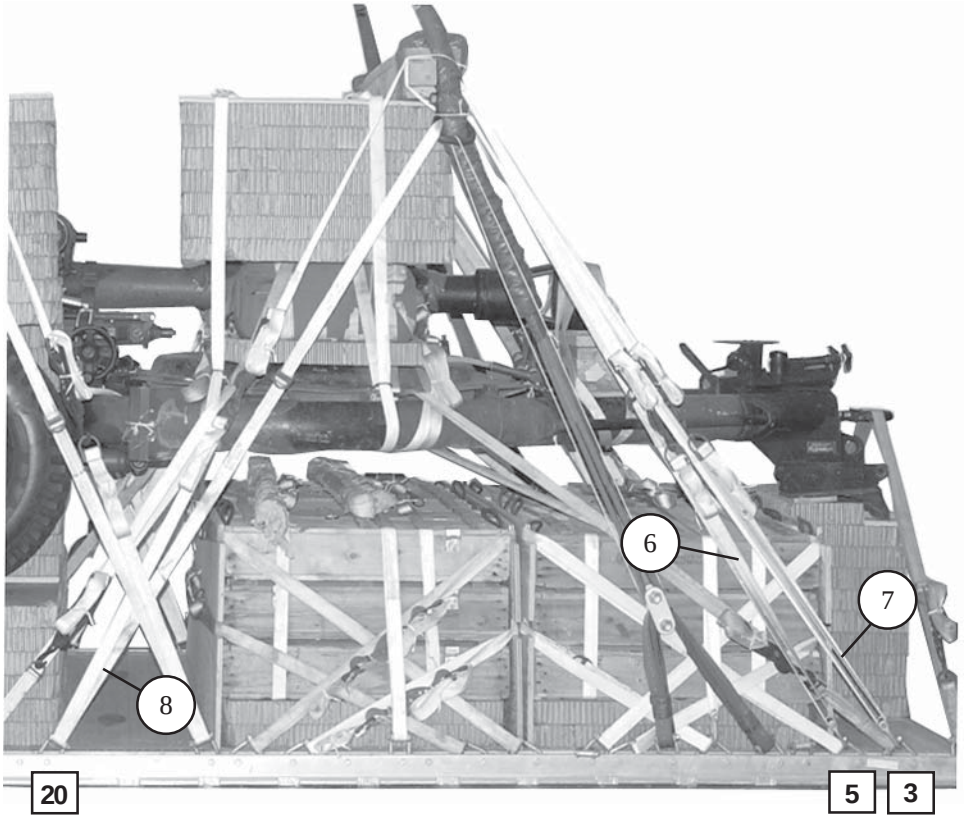

6 Route a 30-foot lashing from clevis 5 through right ACS clevis from front to rear, around the ACS 4- by 4-inch lumber and back to clevis 5.

7 Repeat above step using clevis 3.

8 Route a 30-foot lashing from clevis 20 through right ACS clevis from rear to front, around the ACS 4- by 4-inch lumber and back to clevis 20.

9 Repeat steps 6 through 8 on the left side of load using clevises 3A, 5A, and 20A (not shown).

10 Ensure the ACS is straight and centered on load. Load binders on both sides of the load must be closed at the same time in the following sequence: 5 and 5A, 3 and 3A, 20 and 20A.

Figure 6-27. Slings Installed and ACS Secured (Continued)

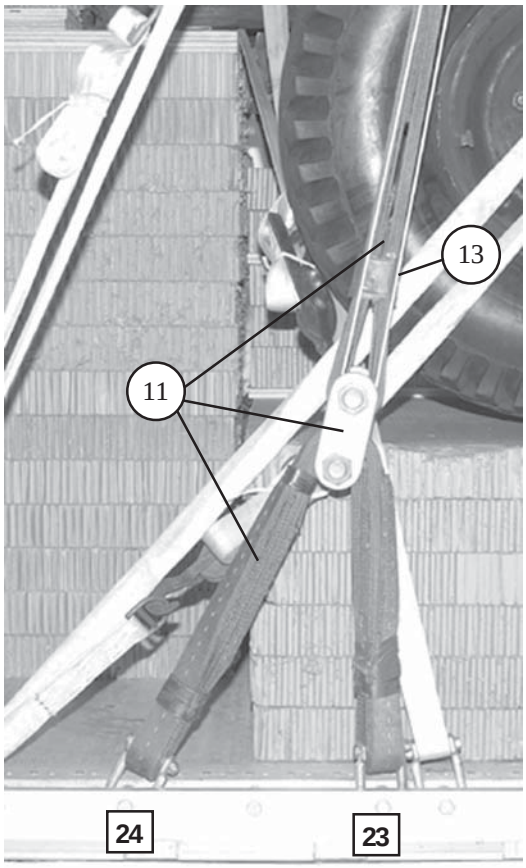

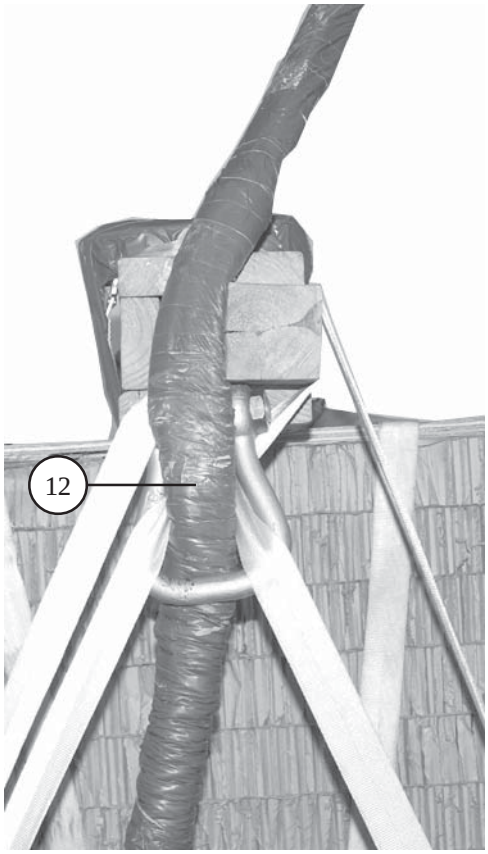

(11) Install a 3-foot (4-loop), type XXVI nylon sling to clevises 23 and 24. Connect an 11-foot (4-loop), type XXVI nylon sling to the center of the 3-foot sling with a 3 3/4-inch two point link.

(12) Route the sling through the clevis on the ACS from rear to front. Pad and tape the 11-foot sling with felt from a point 6 inches below the clevis to a point 6 inches above the top of the ACS.

(13) Safety tie the 3 3/4-inch two point link to the ACS clevis with a loop of type III nylon cord. Ensure the tie is tight.

(14) Install a 3-foot (4-loop), type XXVI nylon sling to the other end of the 11-foot sling with a 3 3/4-inch two point link. Pad and tape the link (not shown). See Chapter 3.

(15) Repeat steps 11 through 13 on the left side using clevises 23A and 24A. (Not shown)

Figure 6-27. Slings Installed and ACS Secured (Continued)

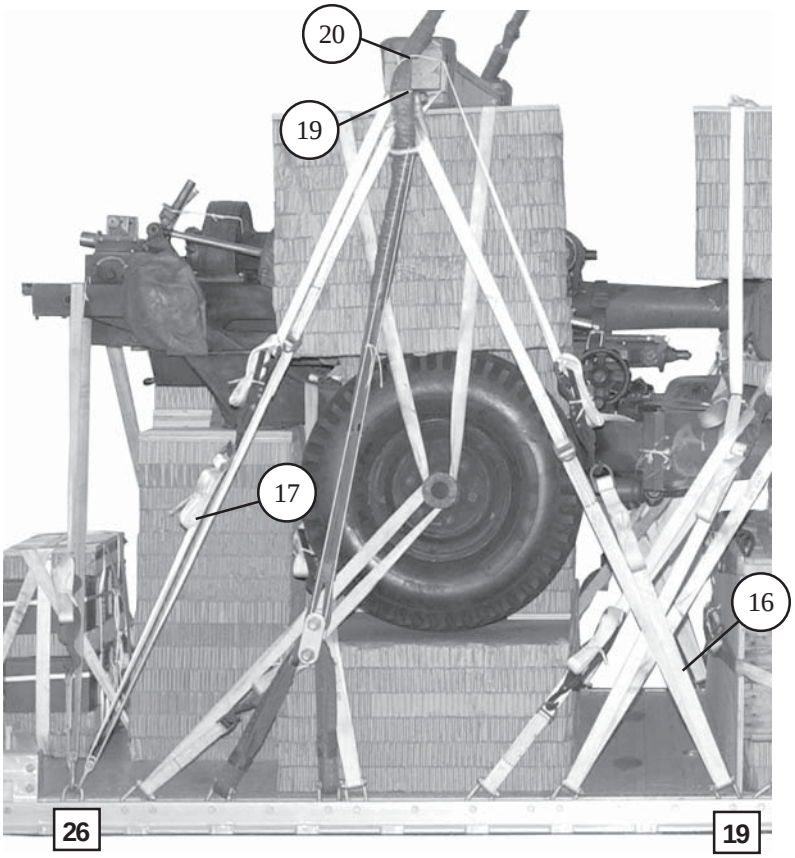

(16) Route a 30-foot lashing from clevis 19 through right rear ACS clevis from outside to inside, rear to front, around the ACS 4- by 4-inch lumber and back to clevis 19.

(17) Route a lashing from clevis 26 through right rear ACS clevis from outside to inside, front to rear, around ACS 4- by 4-inch lumber and back to clevis 26.

(18) Repeat steps 16 through 17 on the left side of the load. (Not shown)

(19) Remove all slack from the slings. Tie a length of type III nylon cord around the 11-foot sling and the ACS sling. Refer to Chapter 3, Figure 3-2 for detailed view.

(20) Tie a length of type III nylon cord around the 11-foot nylon sling, behind all lashings, and the 4- by 4-inch lumber of the ACS and tie the ends together. Refer to Chapter 3, Figure 3-2 for detailed view.

(21) Repeat steps 19 and 20 on all slings. (Not shown)

Figure 6-27. Slings Installed and ACS Secured (Continued)

INSTALLING OUTRIGGER ASSEMBLIES

6-11. Assemble, install, and safety tie the mast and foot assemblies on the DRAS platform according to TM 10-1670-268-20&P/TO 13C7-52-22 and as shown in Chapter 3, Figures 3-33 through 3-35 and Figure 3-36 steps 1, 2, and 3.

STOWING CARGO PARACHUTES

6-12. Prepare the parachute stowage platform, stow, and restrain three G-11D cargo parachutes on top of the stowage platform as shown in Chapter 3 and as shown in Figure 6-28.

Notes: 1. All measurements are given in inches.
2. This drawing is not drawn to scale.
3. 8d common wire nails must be used to join the individual pieces.

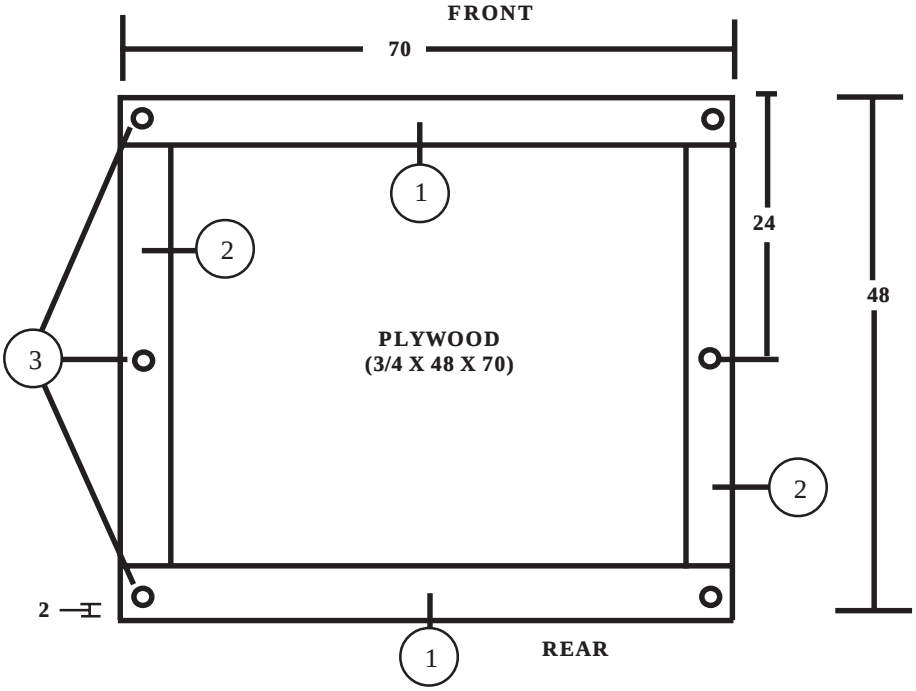

(1) Nail a 2- by 6- by 70-inch piece of lumber flush with the front and rear edges of a 3/4- by 48- by 70-inch piece of plywood.

(2) Nail a 2- by 6- by 37-inch piece of lumber to each side of the plywood as shown.

(3) Make three 2-inch holes in each 48-inch side of the platform as shown.

Figure 6-28. Parachute Stowage Platform Constructed and Cargo Parachutes Stowed

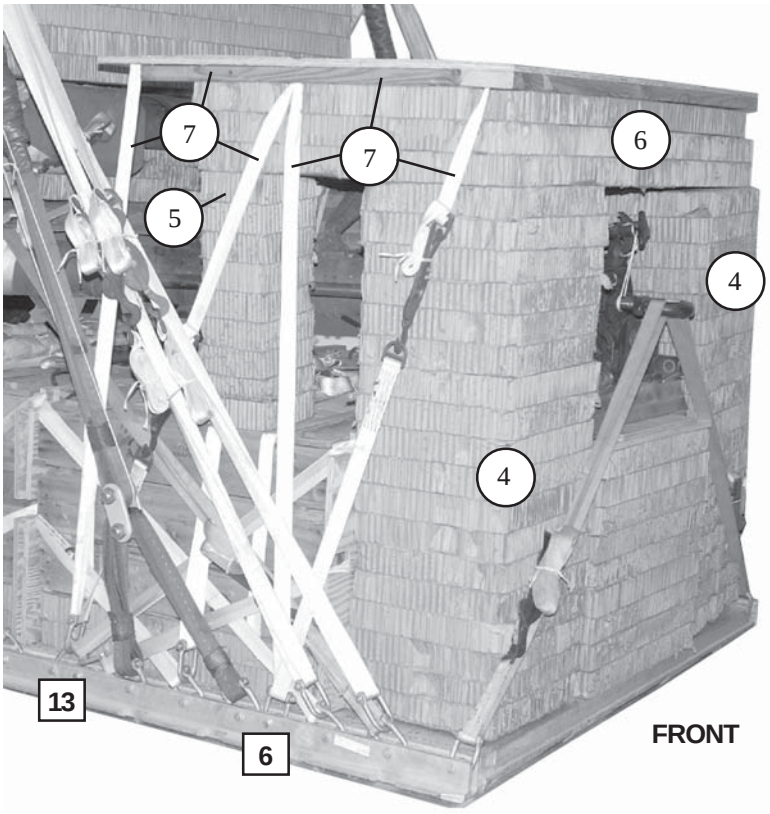

(4) Set two stacks of 18 layers each of 17- by 20-inch honeycomb flush against each side of stack 1 and the front of the platform.

(5) Set two stacks of 9 layers each of 10- by 10-inch honeycomb on top of the first stack of ammunition.

(6) Set three 70- by 36-inch pieces of honeycomb on top of the four stacks flush with the front and sides. Ensure that the 10- by 10-inch honeycomb stacks are flush with the rear and sides of the top three pieces.

(7) Center the parachute stowage platform on the honeycomb stacks. Lash the parachute stowage platform to clevises 6 and 6A and clevises 13 and 13A.

Figure 6-28. Parachute Stowage Platform Constructed and Cargo Parachutes Stowed (Continued)

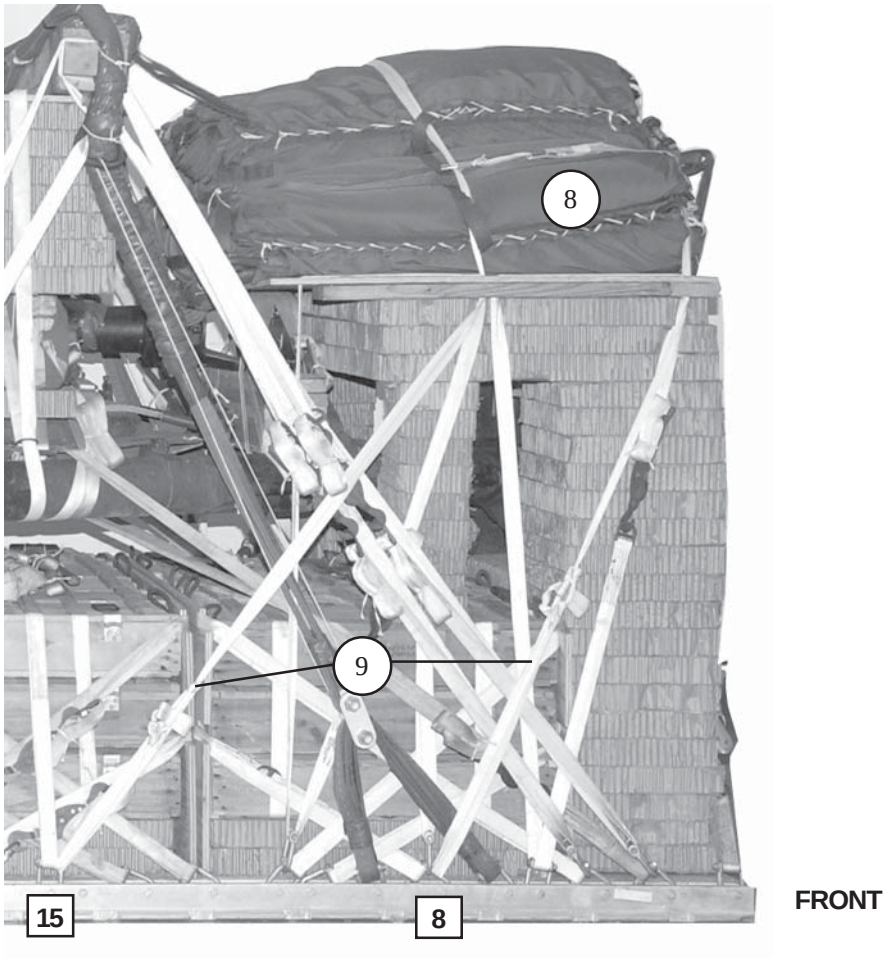

(8) Prepare and install three G-11D cargo parachutes on top of the stowage platform as shown above and in Chapter 3.

(9) Restrain the parachutes using type VIII nylon webbing tied to clevises 8, 8A, 15, and 15A.

Figure 6-28. Parachute Stowage Platform Constructed and Cargo Parachutes Stowed (Continued)

STOWING DEPLOYMENT PARACHUTE

6-13. Prepare, stow, and install the deployment parachute according to Chapter 3, Section IV and as shown in Figure 6-29.

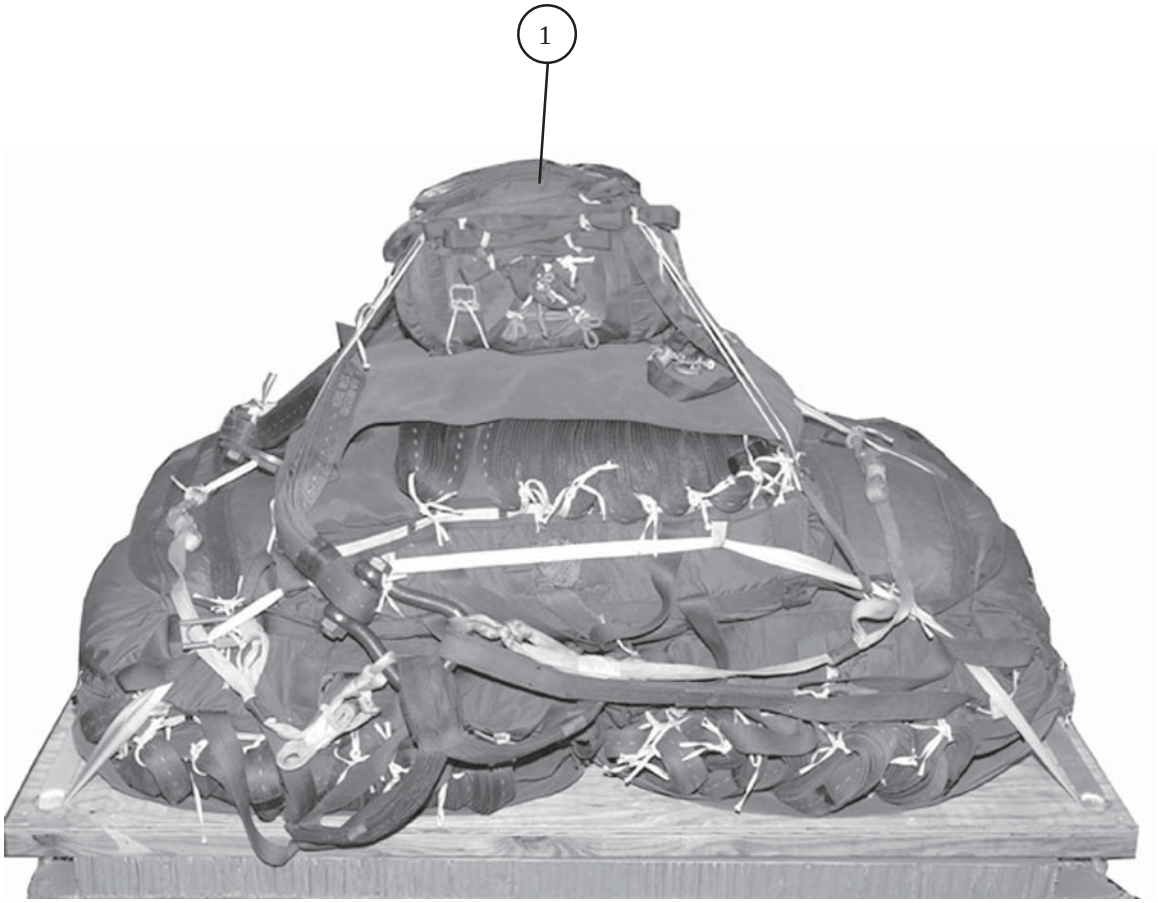

1 Prepare, stow, and install the deployment parachute according to Chapter 3, Section IV and as shown above.

Figure 6-29. Deployment Parachute Installed

INSTALLING PARACHUTE RELEASE SYSTEM

6-14. Build an M-1 parachute release stack. Prepare and install an M-1 release system according to Chapter 3, Section V and as shown in Figure 6-30.

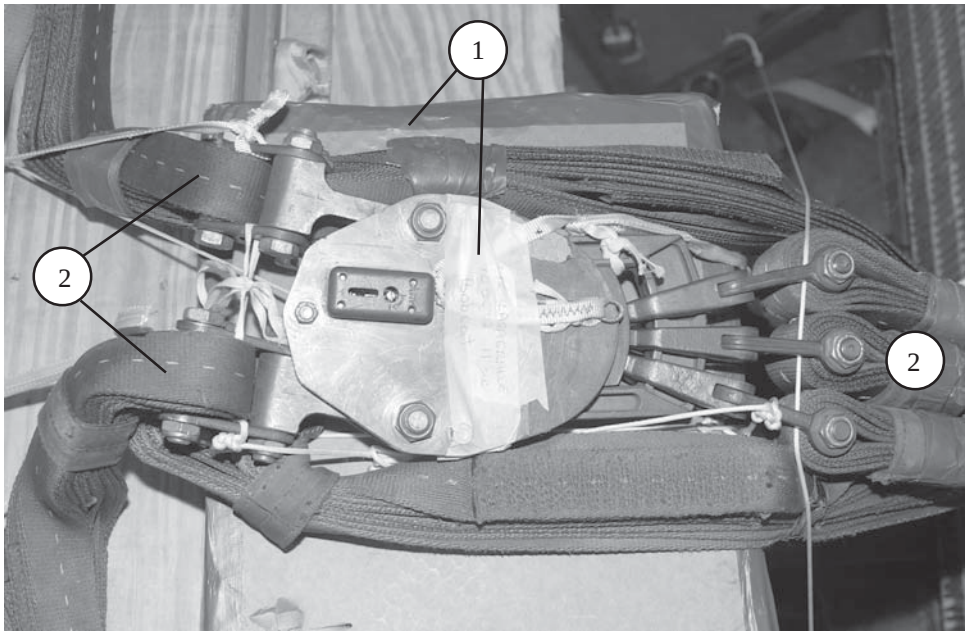

1 Cut three 20- by 15-inch pieces of honeycomb and glue together to form the M-1 release parachute stack. Tape the top edges of the honeycomb. Center the stack against the front edge of the rear ACS and secure it with type III nylon cord. Place the M-1 release on the support stack.

2 Attach riser extensions and suspension slings to the M-1 release.

Note: Remove the buffers from the ends of the suspension slings that attach to the M-1 release.

3 Group the riser extensions together and tie, equally spaced, with type I, 1/4-inch cotton webbing making three ties (not shown). S-fold the slack in the front and rear suspension slings on top of the rear ACS according to Chapter 3 of this manual.

Figure 6-30. Parachute Release System Installed

INSTALLING MAST RELEASE KNIVES

6-15. Install the mast release knives according to Chapter 3, Figure 3-36, Steps 4 through 10 and as shown in Figure 6-31.

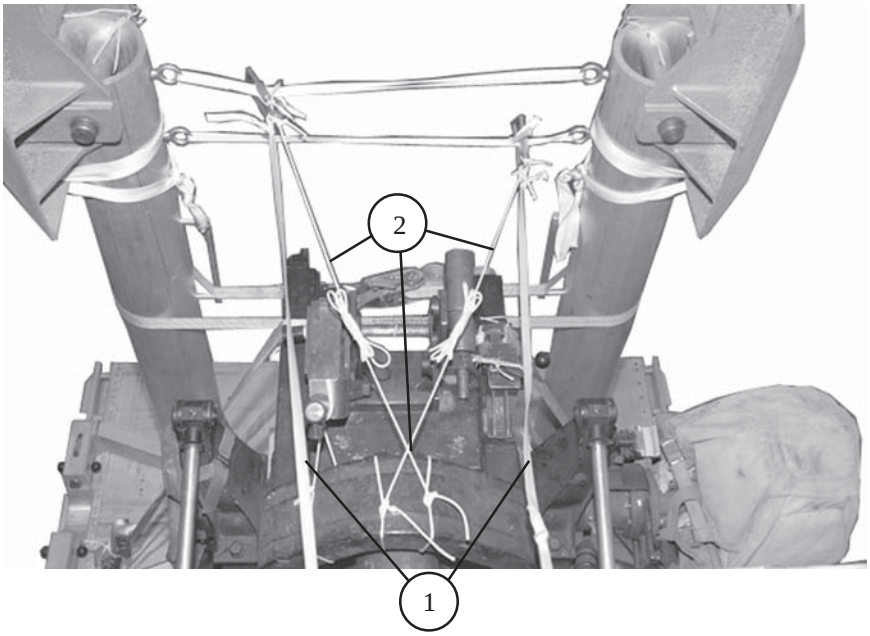

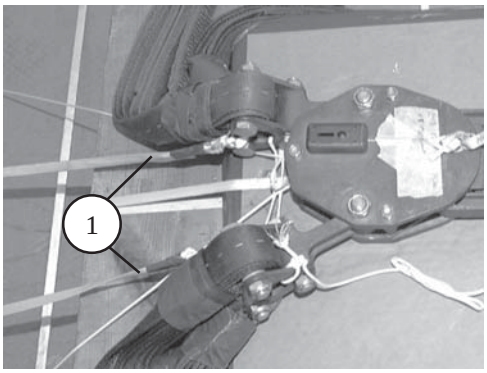

(1) The lengths of the left and right 1/2-inch tubular nylon webbing from the base of the guillotine knives to the lower suspension links of the M-1 release is 59 inches as shown in steps 5 and 6 of Figure 3-36.

(2) Tie a length of type III nylon cord through the left part of the gun and to the body of the right top guillotine knife that measures 58-inches from the trunnion (hole) of the equilibrator arm to the base of the guillotine knife. Repeat for the right part of the gun and left lower guillotine knife as shown in steps 9 and 10 of Figure 3-36.

Note: All measurements are from knot to knot.

Figure 6-31. Mast Release Knives Installed

MARKING RIGGED LOAD

6-16. Mark the rigged load according to Chapter 3 and as shown in Figure 6-32. A Shipper's Declaration for Dangerous Goods is required.

EQUIPMENT REQUIRED

6-17. The equipment required to rig this load is listed in Table 6-1.

CAUTION
Make the final rigger inspection required by Chapter 3 of this manual before the load leaves the rigging site.

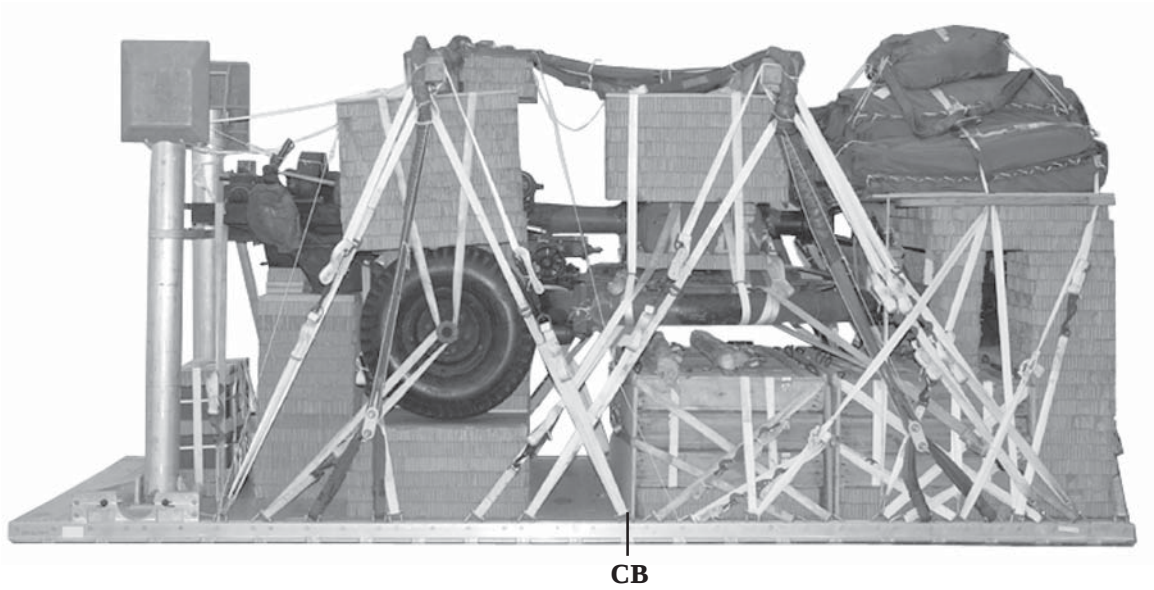

RIGGED LOAD

Weight Load shown	11,200 pounds
Maximum weight	11,300 pounds
Height	98 inches
Width	94 inches
Length	220 inches
Center of Balance (from front edge of platform)	94 inches

Figure 6-32. M119 Howitzer and Accompanying Ammunition Rigged for Dual Row Airdrop

Table 6-1. Equipment Required for Rigging M119 Howitzer and Accompanying Ammunition for Dual Row Airdrop

National Stock Number	Item	Quantity
8040-00-273-8713	Adhesive paste, 1-gal	required
4020-00-240-2146	Cord, nylon, type III, 550-lb	As required
4030-00-090-5354	Clevis, large	5
4030-00-678-8562	Clevis, medium	4
	Link assembly:	
	Two-point, 3 3/4-in	9
5306-00-435-8994	Bolt, 1-in diam, 4-in long	18
5310-00-232-5165	Nut, 1-in, hexagonal	18
1670-00-003-1953	Plate, side, 3 3/4-in	18
5365-00-007-3414	Spacer, large	18
	Lumber:	
5510-00-220-6146	2- by 4-in	As required
5510-00-220-6148	2- by 6-in	As required
5510-00-220-6274	4- by 4-in	As required
5530-00-618-8073	Plywood, 3/4-in	6 sheets
5315-00-010-4659	Nail, steel wire, common, 8d	As required
1670-00-753-3928	Pad, energy dissipating, honeycomb, 3- by 36- by 96-in	24 Sheets
1670-01-487-5461	Staticline assembly release away	1
	Parachute:	
	Cargo:	
1670-01-016-7841	G-11D	3
	Cargo extraction: (Deployment Parachute)	
1670-00-040-8135	28-foot	1
	Platform, Dual Row, 18-foot	
	Rail, DRAS	2
	Roller Pad, DRAS	4
	Panel Assembly, Main	9
1670-01-162-2372	Clevis assembly	56
1670-01-097-8816	Release, cargo parachute, M-1	1

Table 6-1. Equipment Required for Rigging M119 Howitzer and Accompanying Ammunition for Dual Row Airdrop (Continued)

National Stock Number	Item	Quantity
	Sling, cargo airdrop	
	For suspension:	
1670-01-062-6310	11-ft (4-loop), type XXVI nylon webbing	4
1670-01-062-6306	3-ft (4-loop), type XXVI nylon webbing	8
	For deployment:	
1670-01-062-6306	3-ft (4-loop), type XXVI nylon webbing	1
	For riser extention:	
1670-01-062-6313	60-ft (3-loop), type XXVI nylon webbing	2
	For ACS:	
1670-01-063-7761	16-ft (2-loop), type XXVI nylon webbing	2
	For lifting:	
1670-01-062-6303	11-ft (2-loop), type XXVI nylon webbing	4
1670-00-040-8219	Strap, parachute release, multicut	2
1670-00-937-0271	Knife release,cargo (guillotine)	2
1670-01-487-5464	Outrigger assembly	2
7510-00-266-5016	Tape, adhesive, 2-in	As required
1670-00-937-0271	Tie-down assembly, 15-ft	58
1670-00-725-1437	Tie-down, Cargo, Aircraft, (CGU-1B)	1
	Webbing:	
8305-00-268-2411	Cotton, 1/4-in, type I	As required
	Nylon:	
8305-00-082-5752	Tubular, 1/2-in	As required
8305-00-263-3591	Type VIII	8 yds

CHAPTER 7

RIGGING DUAL ROW AIRDROP SYSTEM (DRAS) M101A1 OR M101A2, 3/4-TON CARGO TRAILER WITH ACCOMPANYING LOADS

DESCRIPTION OF LOAD

7-1. The M101A1 or M101A2, 3/4-ton cargo trailer (Figure 7-1) with accompanying loads is rigged on a DRAS airdrop platform. The M101A1 3/4-ton cargo trailer with accompanying loads, consisting of 30 boxes (M101A2 uses 28 boxes) of 105-millimeter ammunition and weighing 3,210 pounds (2,996 pounds for the M101A2), is rigged with two G-11D cargo parachutes. An accompanying load consisting of 14 boxes of 105-millimeter ammunition weighing 1,500 pounds is stowed in the trailer. Additional accompanying loads consisting of 16 boxes of 105-millimeter ammunition are stowed on the platform (14 boxes of 105-millimeter ammunition for the M101A2). The unrigged trailer weighs 1,340 pounds (M101A2 weighs 1,375 pounds). The M101A1 trailer is 147 inches long and 71 inches wide. The height of the trailer is 82 inches, reducible to 51 inches.

PREPARING PLATFORM

7-2. Inspect, or assemble and inspect, a DRAS platform with outrigger assemblies and outrigger platform support weldments according to TM 10-1670-268-20&P and as shown in Figure 7-2.

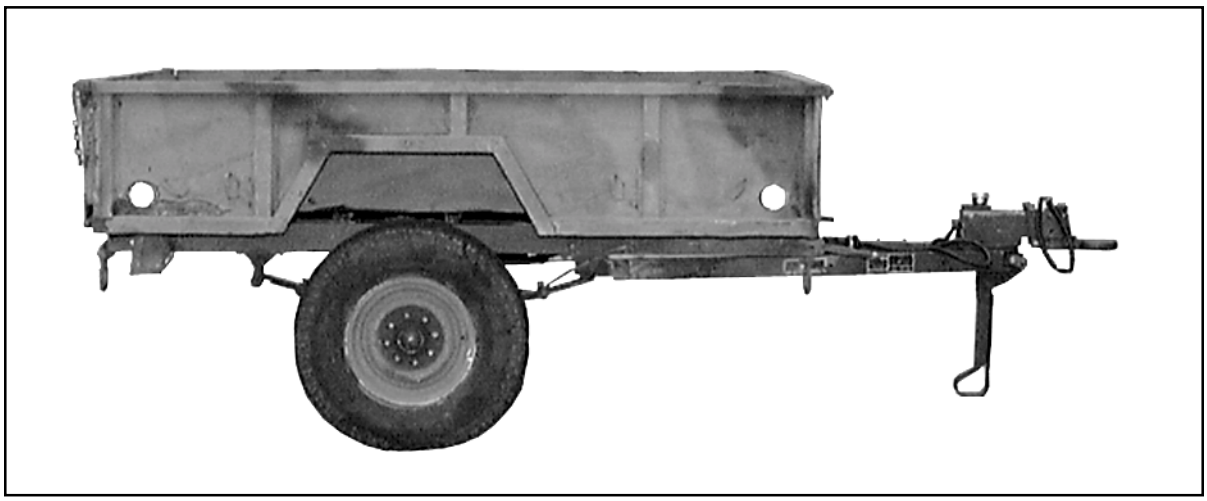

Figure 7-1. M101A1, 3/4- Ton Cargo Trailer

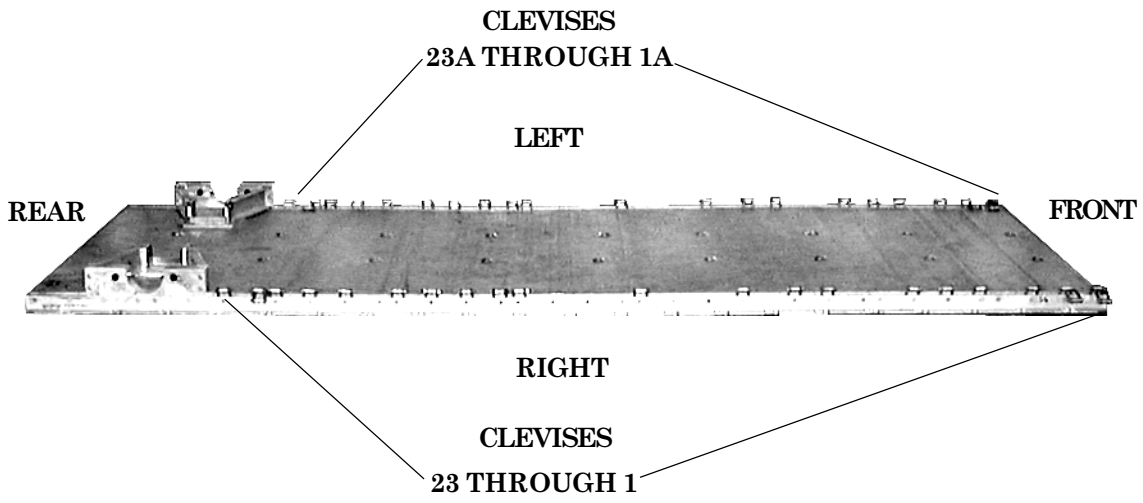

Step:

1. Starting at the front of each platform side rail, install clevises on the bushings bolted on holes 1 (doubled), 2 (doubled), 3, 5, 6, 7, 10, 11, 13, 16, 20, 21, 22, 23, 24, 26, 27, 28, 29 (doubled), and 30.
2. Starting at the front of the platform, number the clevises 1 through 23 on the right side and 1A through 23A on the left side.
3. Label the tie-down rings according to Chapter 3 of this manual.

Figure 7-2. Platform Prepared

POSITIONING AND LASHING ACCOMPANYING LOADS ON PLATFORM

7-3. Position and lash the accompanying loads on the platform as shown in Figures 7-3 through 7-8.

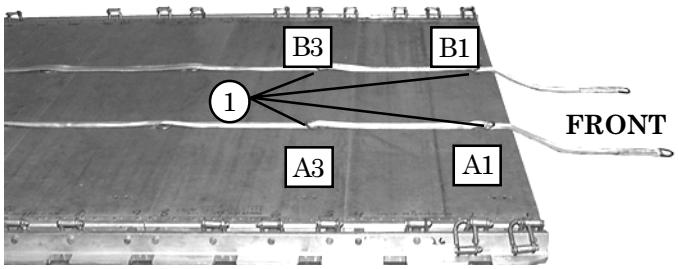

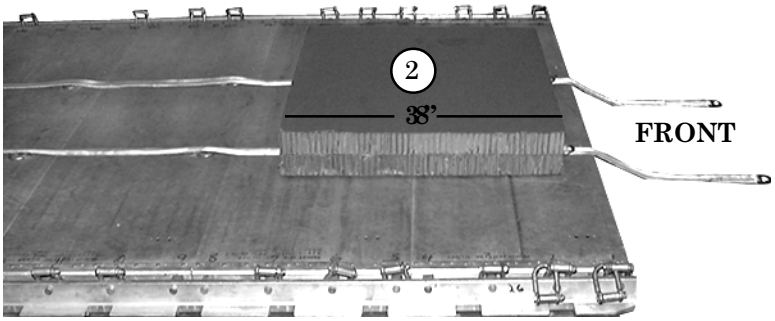

1. Pre-position two 15-foot lashings. Position one lashing through tie down rings A1 and A3. Position the second lashing through tie down rings B1 and B3.

2. Center two 36- by 38-inch pieces of honeycomb 5 inches from the front edge of the platform.

Figure 7-3. Honeycomb and Lashings Positioned on the Front of the Platform

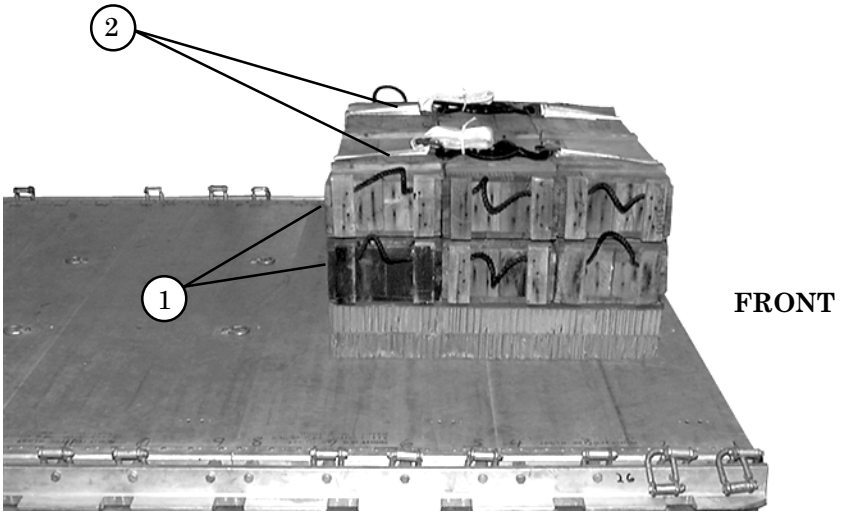

1. Place six ammunition boxes in three stacks of two each on top of the honeycomb.
2. Bind the boxes together using the pre-positioned lashings, two D-rings, and two load binders.

Figure 7-4. Ammunition Boxes Positioned on the Front of the Platform

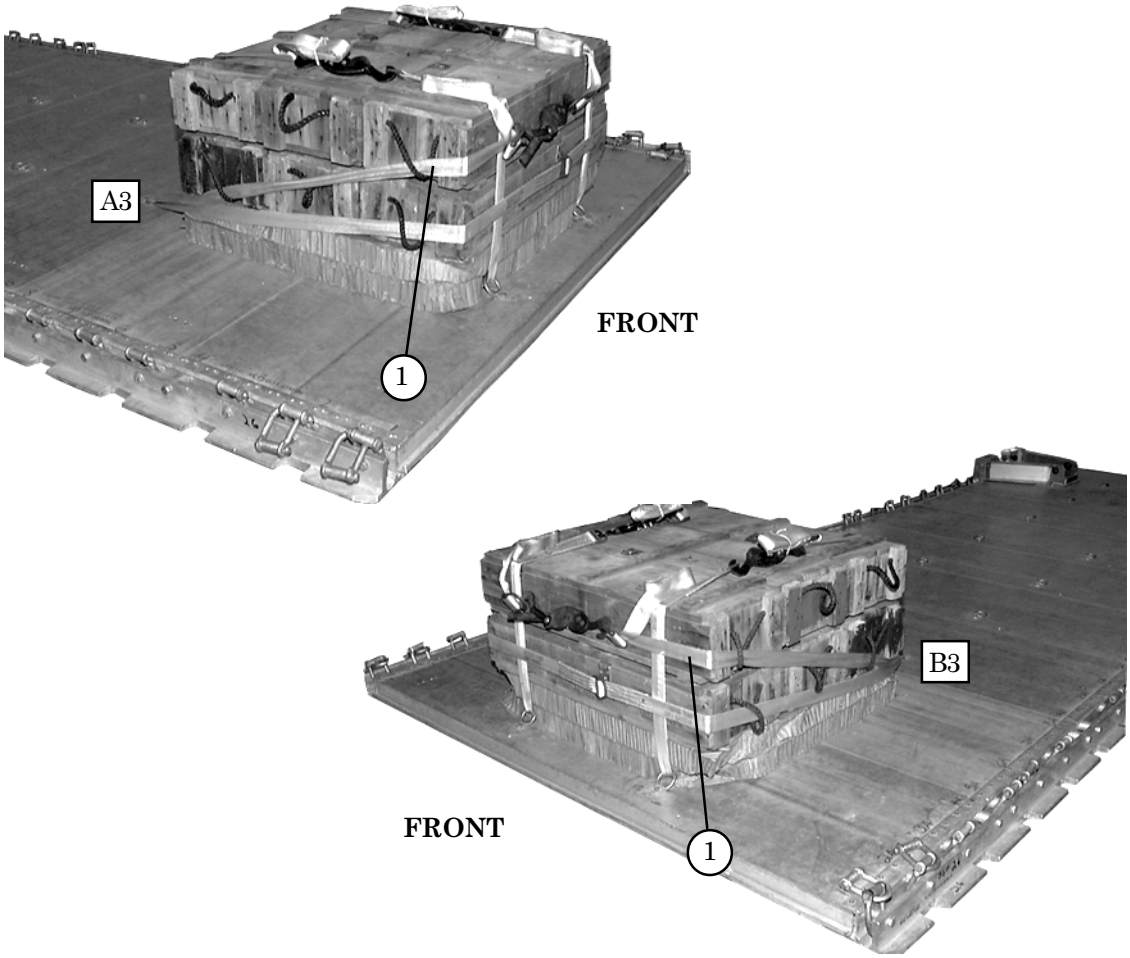

(1) Pass the free end of the lashing through the carrying handle of the top front box on the right side, down through tie-down ring A3, and through the carrying handle of the bottom front box on the right side. Continue to pass the lashing around the front of the bottom box, through the carrying handle of the bottom front box on the left side, through tie-down ring B3, and through the carrying handle of the top front box on the left side. Attach D-rings to both ends of the lashings and attach a load binder. Do not close the load binder at this time.

Figure 7-5. Ammunition Boxes Lashed and Secured on the Front of the Platform

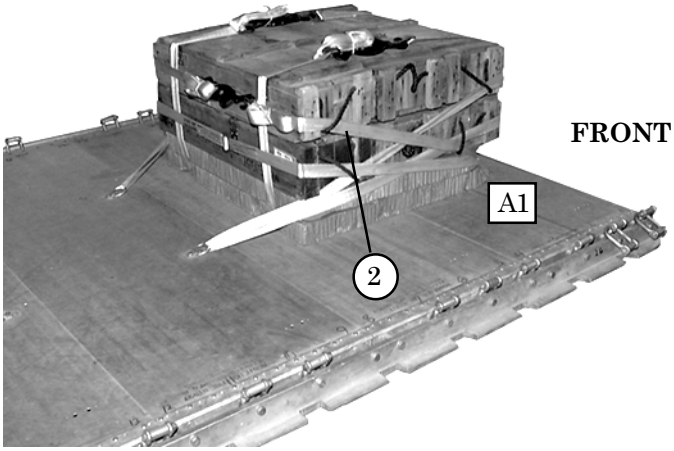

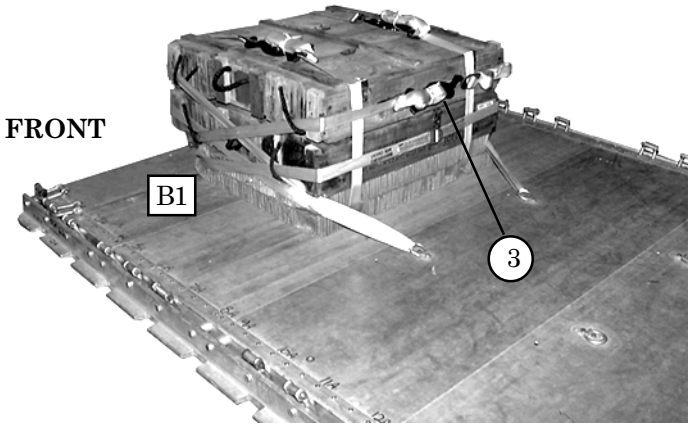

(2) Starting on the right side, pass a 30-foot lashing through the carrying handle of the top rear box, around the rear of the top box, through the carrying handle of the top rear box on the left side, and through tie-down ring B1. Continue to pass the lashing through the carrying handle of the bottom rear box on the left side, around the bottom of the rear box, through the carrying handle of the bottom rear box on the right side, and through tie-down ring A1. Postion the load binder to the top rear of boxes.

(3) Attach a D-ring and a load binder to the end.

(4) Secure each front and rear load binder simultaneously.

Figure 7-5. Ammunition Boxes Lashed and Secured on the Front of the Platform (continued)

Note: This drawing is not drawn to scale.

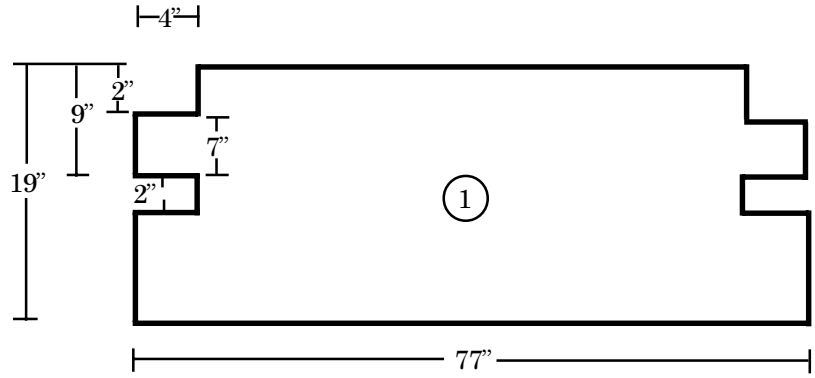

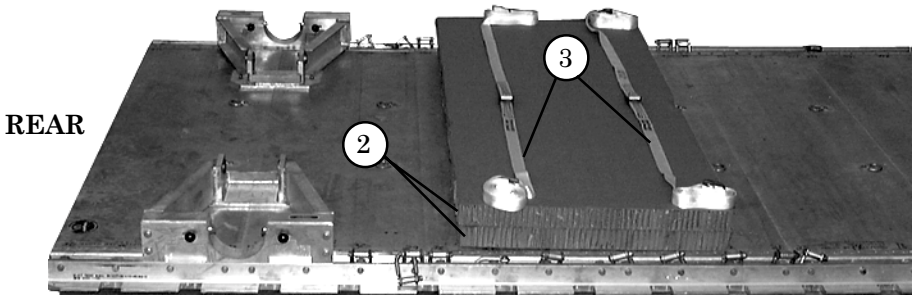

1. Cut two endboards as shown above using two 3/4- by 19- by 77-inch pieces of plywood.
2. Center two 36- by 76-inch pieces of honeycomb 128 inches from front edge of platform.
3. Center two 30-foot lashings laterally across the top piece of honeycomb.

Figure 7-6. Honeycomb and Lashing Positioned on the Rear of the Platform

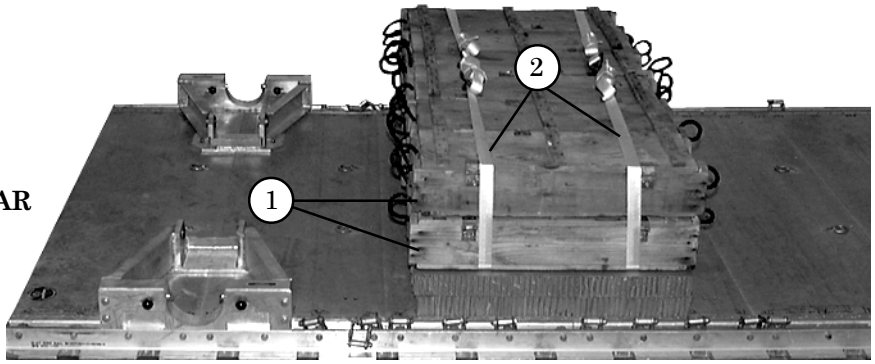

(1) Place 10 ammunition boxes on top of the honeycomb. When postioning the ammunition boxes, ensure that the top row of boxes consist of six ammunition boxes and the bottom row has the remaining four ammunition boxes with two boxes on each outside edge.

Note: Fill the empty space with two layers of 37- by 23-inch honeycomb.

(2) Bind the boxes together using the two pre-positioned lashings, two D-rings, and two load binders.

Figure 7-7. Ammunition Boxes Positioned on the Rear of the Platform

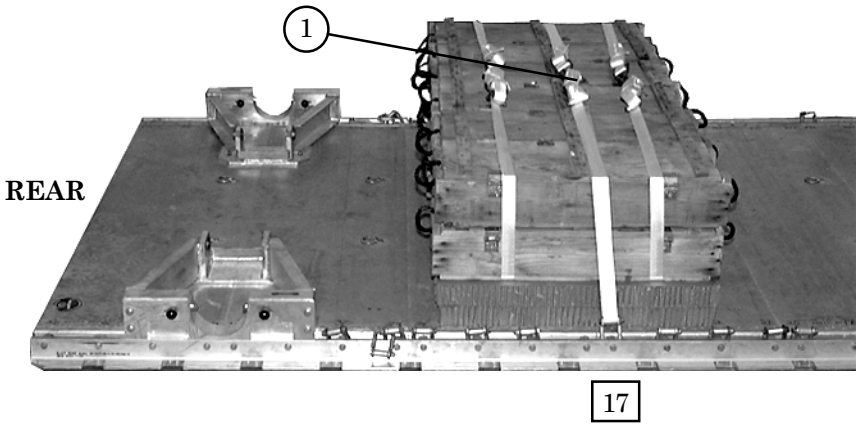

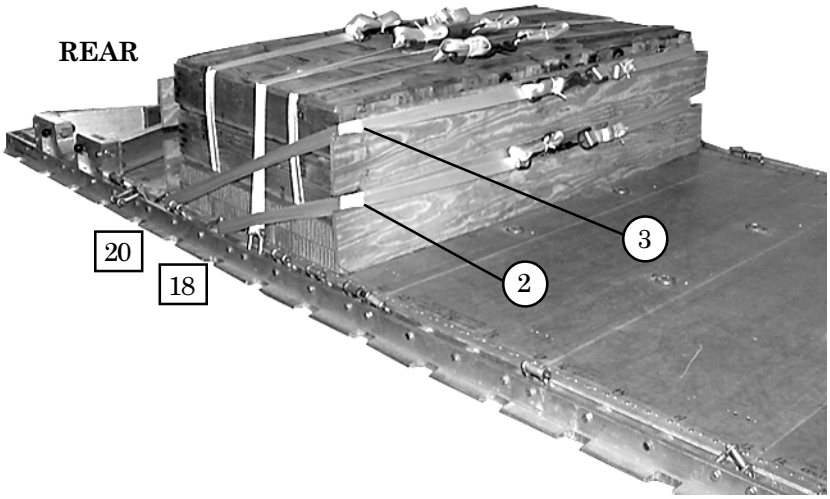

(1) Route a 30-foot lashing through clevis 17 over the top of the boxes and through clevis 17A and load bind on top of the boxes.

(2) Position one endboard to the front of the ammunition boxes with cutouts to the top. Route a 30-foot lashing through clevis 18 and around and through the right front bottom cutout and around and through the left front bottom cutout through clevis 18A. Position and secure the load binder at the front and center of the endboard.

(3) Route a 30-foot lashing through clevis 20 and around and through the right front top cutout and around and through the left front top cutout through clevis 20A. Position and secure the load binder at the front and center of the endboard.

Figure 7-8. Ammunition Boxes Lashed and Secured on the Rear of the Platform

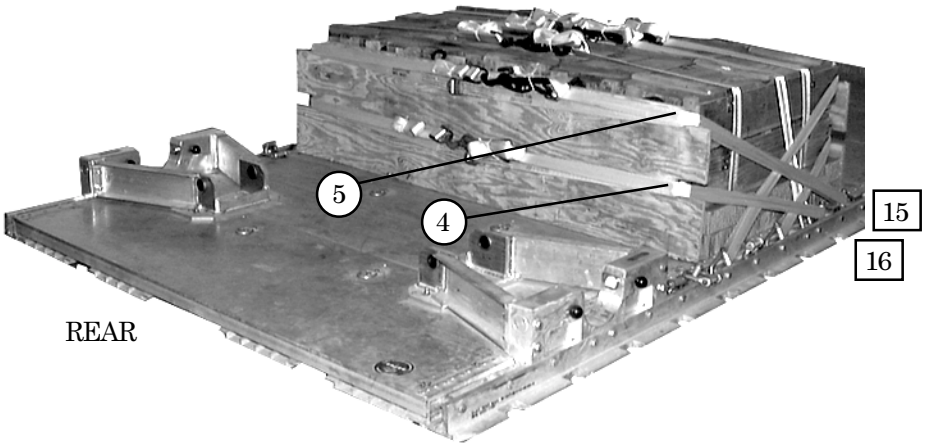

(4) Position the second endboard to the rear of the ammunition boxes with cutouts to the top. Route a 30-foot lashing through clevis 16 and around and through the right rear bottom cutout and around and through the left rear bottom cutout through clevis 16A. Position and secure the load binder at the rear and center of the endboard.

(5) Route a 30-foot lashing through clevis 15 and around and through the right rear top cutout and around and through the left rear top cutout through clevis 15A. Position and secure the load binder at the rear and center of the endboard.

Figure 7-8. Ammunition Boxes Lashed and Secured on the Rear of the Platform (continued)

BUILDING AND PLACING HONEYCOMB STACK

7-4. Prepare the honeycomb stacks as shown in Figures 7-9 through 7-11. Position the honeycomb stack as shown in Figure 7-12.

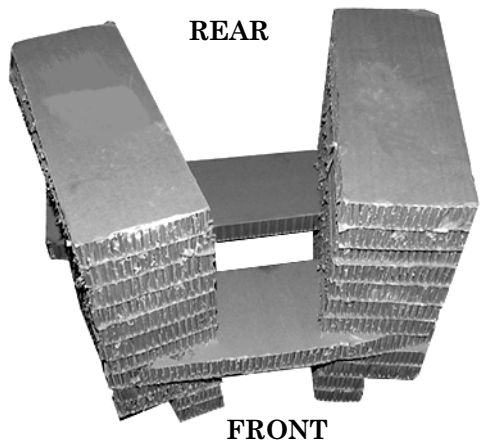

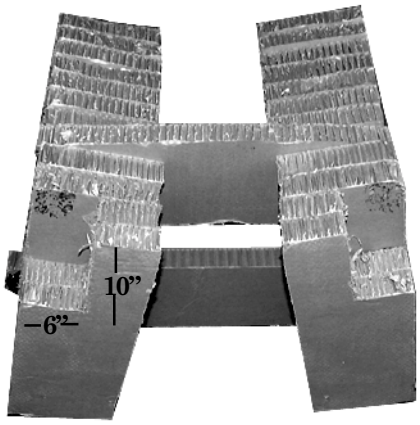

Stack Number	Pieces	Width (inches)	Length (inches)	Material	Instructions
1	8	12	32	Honeycomb	Form two base stacks of four layers each in a "V" shape. Cut a 10- by 6-inch cutout on the front outside of the bottom two layers. Place the stacks 25 inches apart in the rear and 11 inches apart in the front.
	1	36	12	Honeycomb	Place honeycomb over the front of the base stacks to form a bridge. Place the honeycomb so that the front edge of the bridge is aligned with the front outside corners of the base stacks.
	1	48	12	Honeycomb	Place honeycomb over the rear of the base stacks to form a bridge. Place the honeycomb so that the rear edge of the bridge is aligned with the rear outside corners of the base stacks.
	14	12	32	Honeycomb	Form two stacks of seven layers each. Place each stack on top of the bridge and align it with each base stack.

Figure 7-9. Stack 1 Prepared

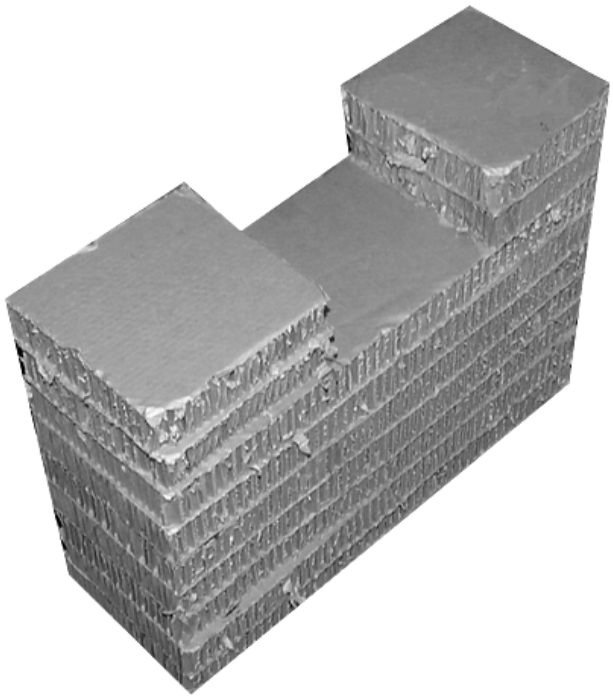

Stack Number	Pieces	Width (inches)	Length (inches)	Material	Instructions
2	7	36	12	Honeycomb	Glue to form base.
	4	12	12	Honeycomb	Stack two pieces of honeycomb flush over each side of the base

Figure 7-10. Stack 2 Prepared

Stack Number	Pieces	Width (inches)	Length (inches)	Material	Instructions
3	12	36	12	Honeycomb	Glue to form base.

Figure 7-11. Stack 3 Prepared

Note: This is not drawn to scale.

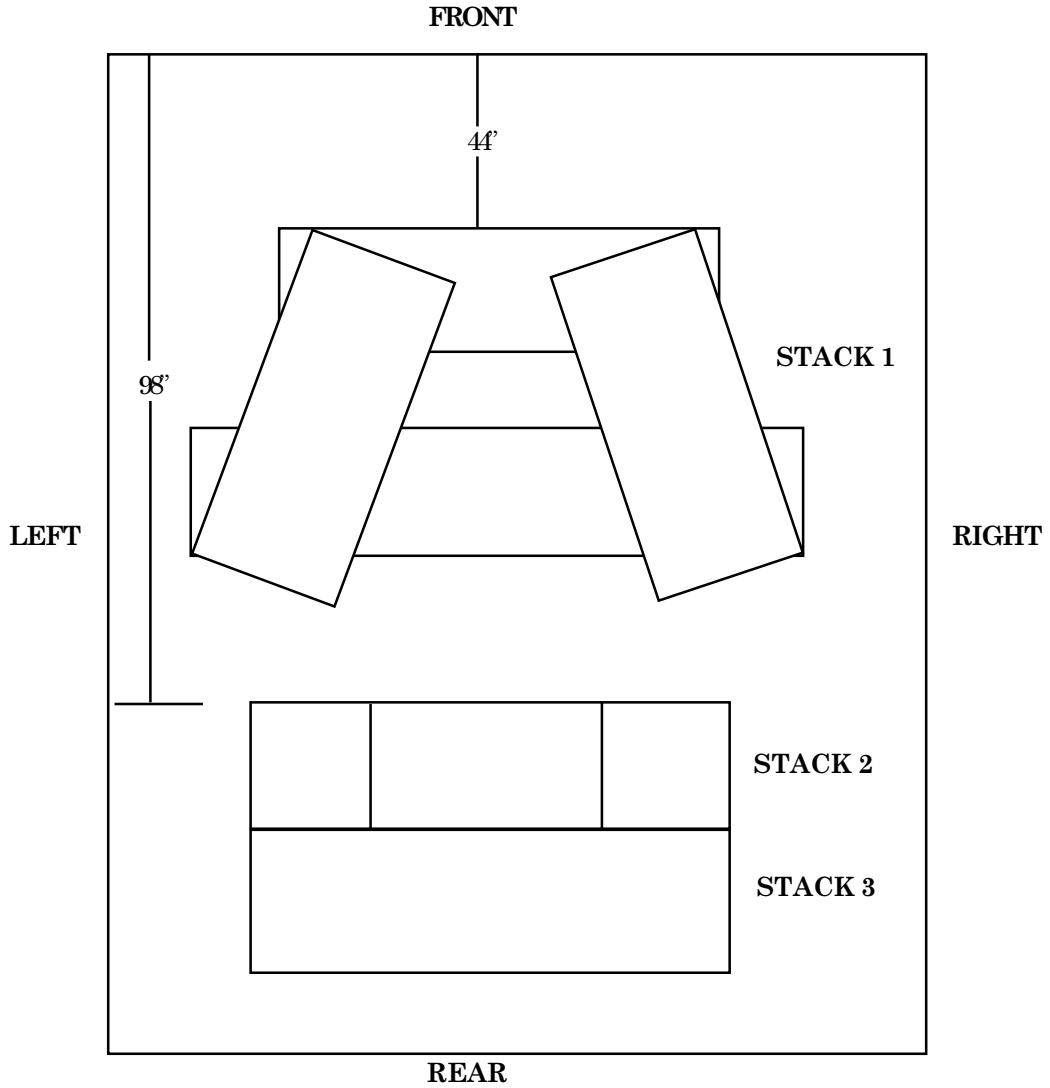

Stack Number	Position of Stacks on Platform
	Place stack:
1	Centered 44 inches from the front edge of platform.
2	Centered 98 inches from the front edge of platform
3	Centered flush against the rear of stack 2.

Figure 7-12. Overhead View of Honeycomb Stacks Positioned on Platform

PREPARING THE TRAILER

7-5. Prepare the trailer as shown in Figures 7-13 and 7-14. Remove the tarpaulin, bows, and side racks according to TM 9-2330-202-14&P.

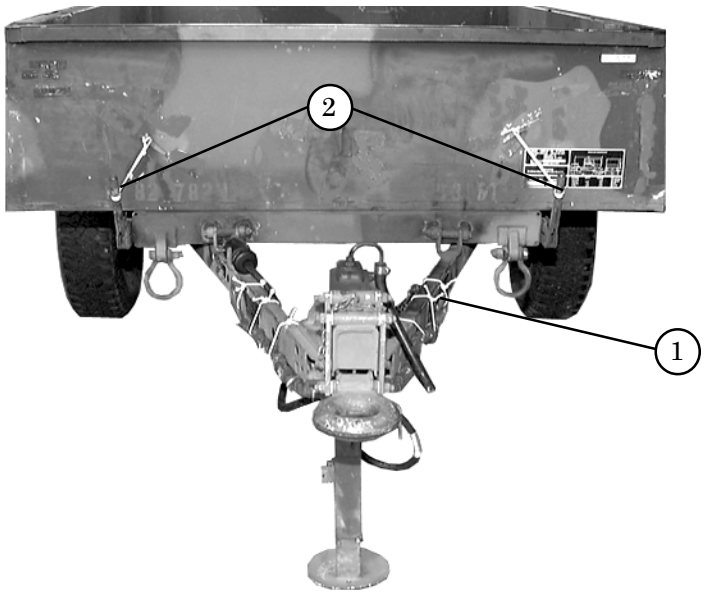

1. Secure the safety chains and intervehicular cable to the drawbar frame with type III nylon cord or tape.
2. Secure the hand brake in the OFF position with two lengths of type III nylon cord.

Figure 7-13. Front of Trailer Prepared

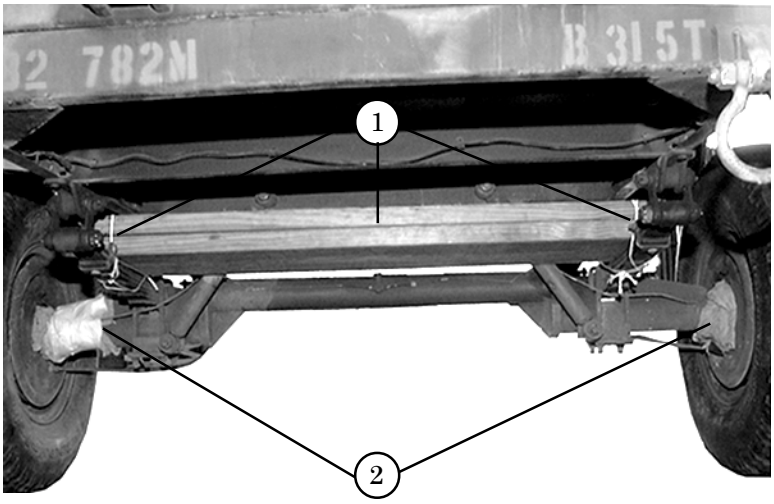

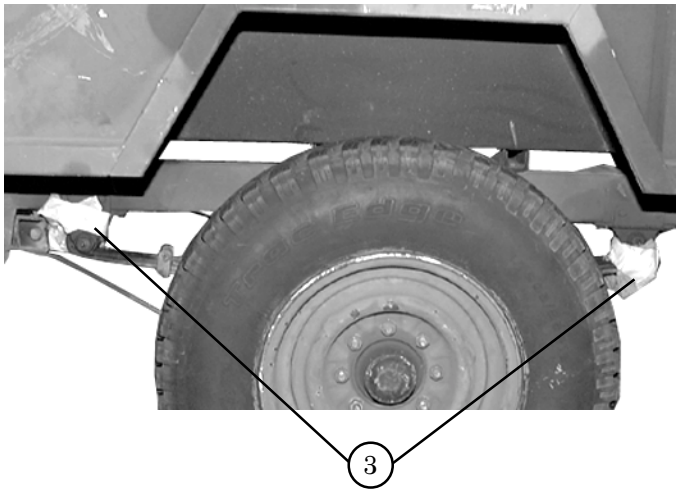

(1) Lay two pieces of 2- by 12- by 46-inch lumber side by side between the leaf springs and the frame. Secure them with type III nylon cord. Be sure to clear the shackle bolts.

(2) Pad axles with cellulose wadding.

(3) Pad the front and rear spring mounted shackle with cellulose wadding.

Figure 7-14. Rear of Trailer Prepared

STOWING ACCOMPANYING LOAD AND TRAILER COMPONENTS IN TRAILER

7-6. Stow the accompanying load of 14 ammunition boxes in the trailer as shown in Figures 7-15 and 7-16. Stow the trailer components as shown in Figure 7-17.

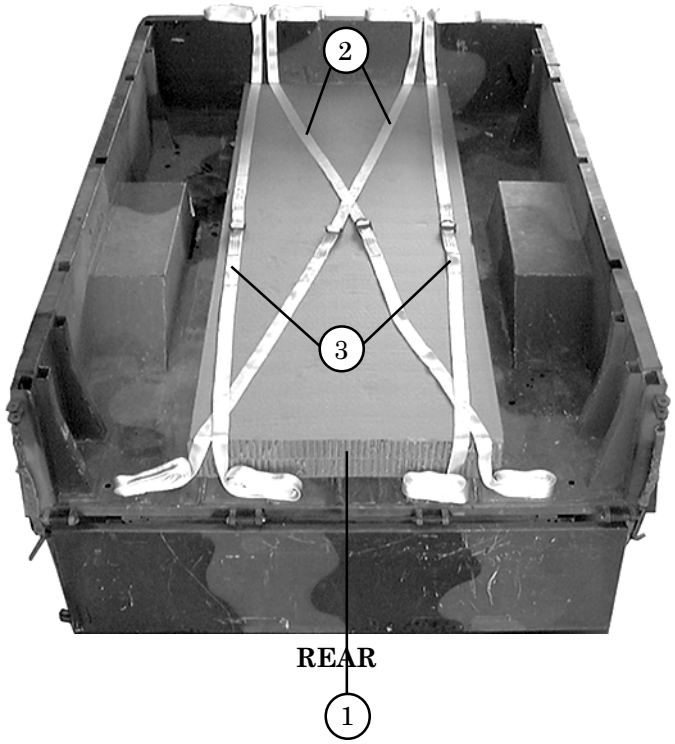

1. Center two 36- by 94-inch pieces of honeycomb in the trailer bed.
2. Form six 30-foot lashings according to Chapter 3. Place two 30-foot lashings on top of the honeycomb from front to rear crossing at the center.
3. Place two 30-foot lashings on top of the honeycomb from front to rear 22 inches apart.

Figure 7-15. Honeycomb, Lashings, and Endboards Positioned in the Trailer

Note: This drawing is not drawn to scale.

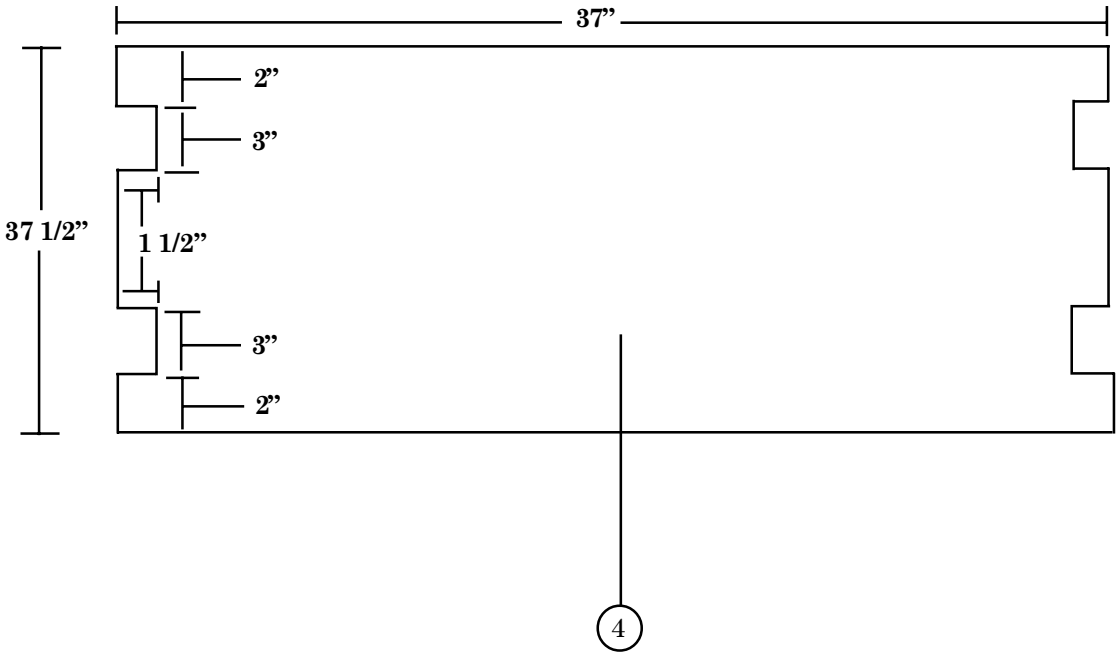

4 Cut one endboard as shown above using one 3/4- by 15 1/2- by 37-inch piece of plywood.

Figure 7-15. Honeycomb, Lashings, and Endboards Positioned in the Trailer (continued)

FRONT

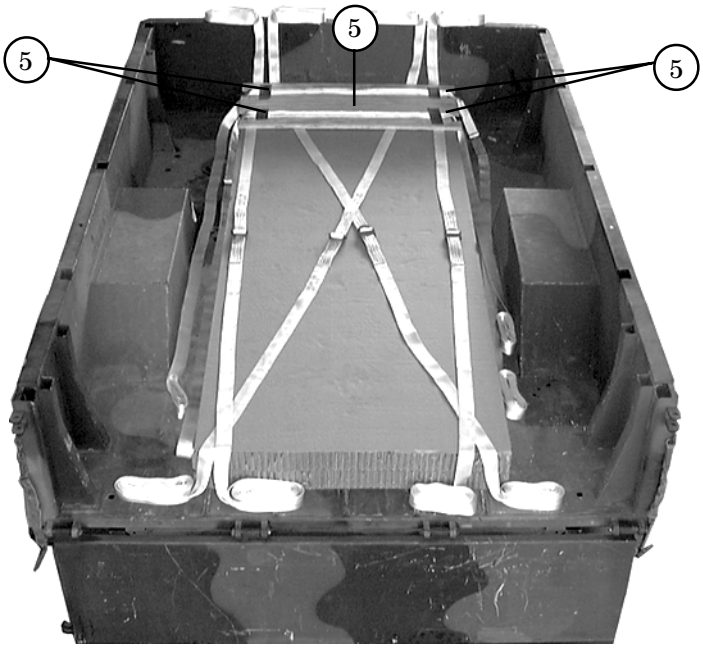

REAR

(5) Place one endboard in the front of the trailer on top of the honeycomb. Place two 30-foot lashings on the back of the endboard, and tape the lashings in place.

Figure 7-15. Honeycomb, Lashings, and Endboards Positioned in the Trailer (continued)

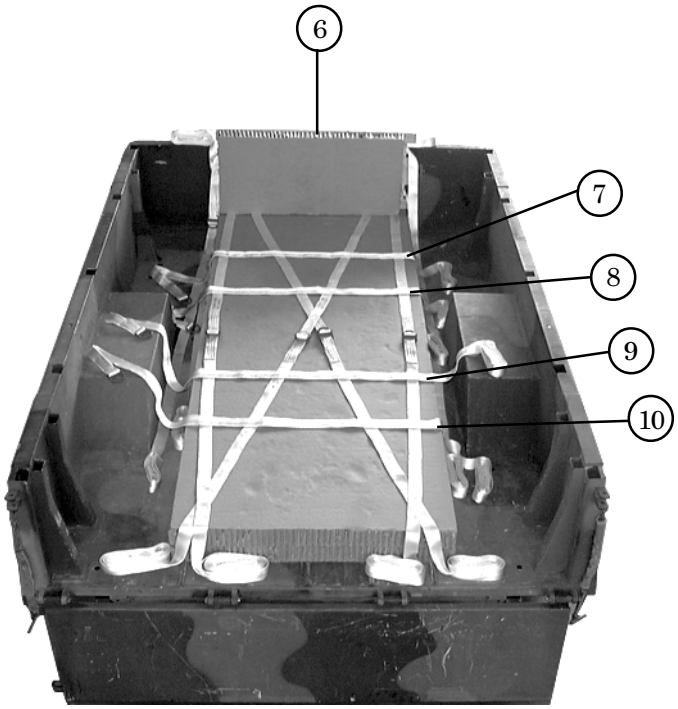

REAR

(6) Place the endboard against the front of the trailer bed. Cut and position one 15- by 36-inch piece of honeycomb against the endboard.

(7) Place one 15-foot lashing on the top of the honeycomb from left to right 21 inches from the front of the trailer.

(8) Place one 15-foot lashing on the top of the honeycomb from left to right 34 inches from the front of the trailer.

(9) Place one 15-foot lashing on the top of the honeycomb from left to right 58 inches from the front of the trailer.

(10) Place one 15-foot lashing on the top of the honeycomb from left to right 70 inches from the front of the trailer.

Figure 7-15. Honeycomb, Lashings, and Endboards Positioned in the Trailer (continued)

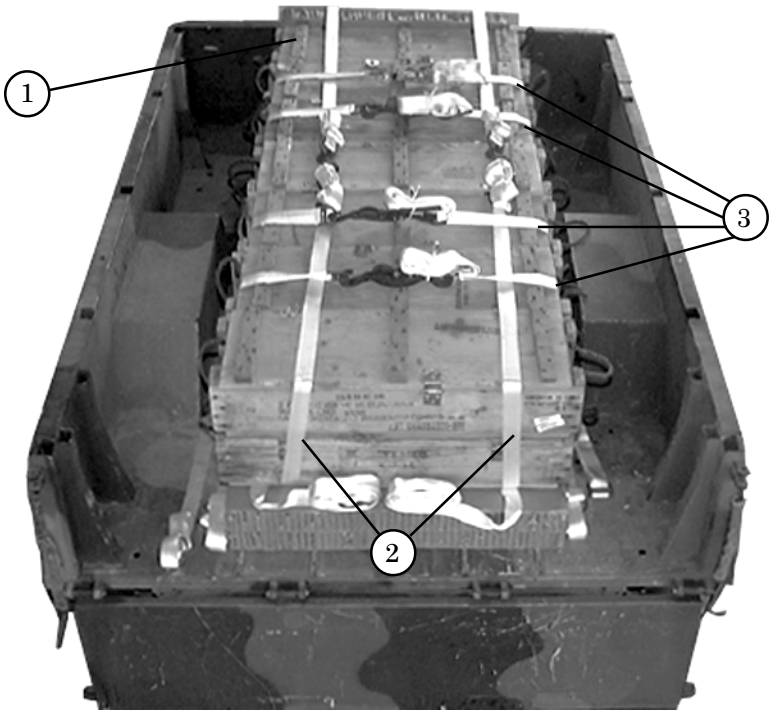

REAR

1. Place 14 ammunition boxes in two layers of seven each on top of the honeycomb. Place them flush against the piece of honeycomb.
2. Secure the boxes in place with the two pre-positioned lashings running front to rear.
3. Secure the boxes in place with the four pre-positioned lashings running left to right.

Note: The lashings may need to be adjusted slightly after the ammunition boxes are set in place.

Figure 7-16. Ammunition Boxes Lashed and Secured in the Trailer

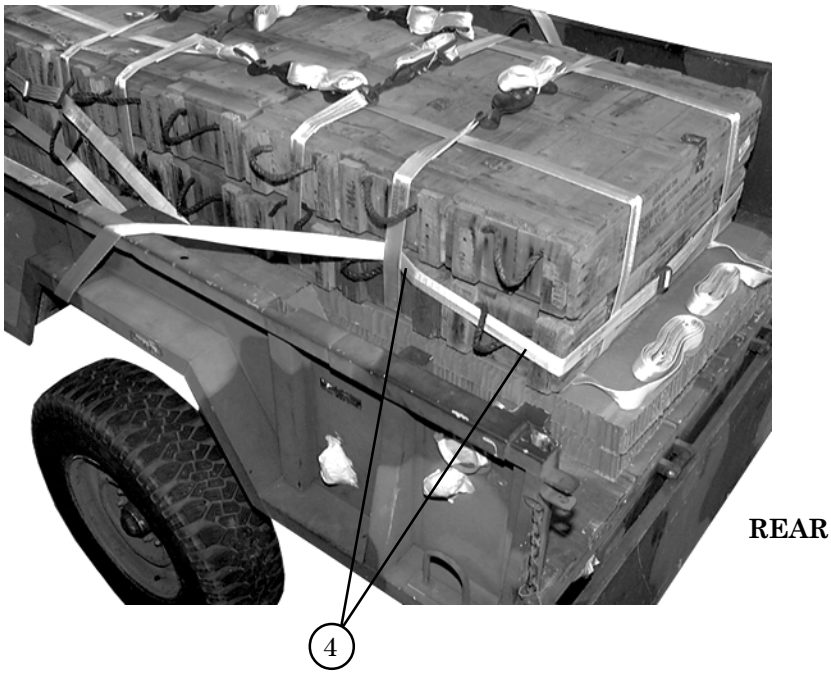

4 Form a 30-foot lashing according to Chapter 3 of this manual. Run the lashing across the rear bottom box. Pass each free end through the carrying handle of the rear bottom box and between the rear lashing (shown in step 10) and boxes. Run each free end over the side panel of the trailer, in front of the wheel well.

Figure 7-16. Ammunition Boxes Lashed and Secured in the Trailer (continued)

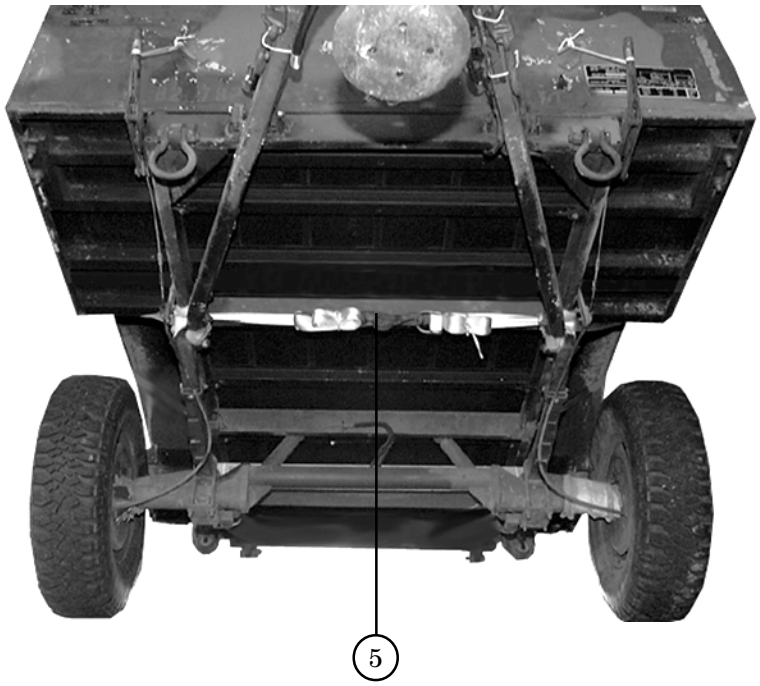

FRONT

(5) Secure the lashing to the front of the second cross member of the trailer with two D-rings and a load binder.

Figure 7-16. Ammunition Boxes Lashed and Secured in the Trailer (continued)

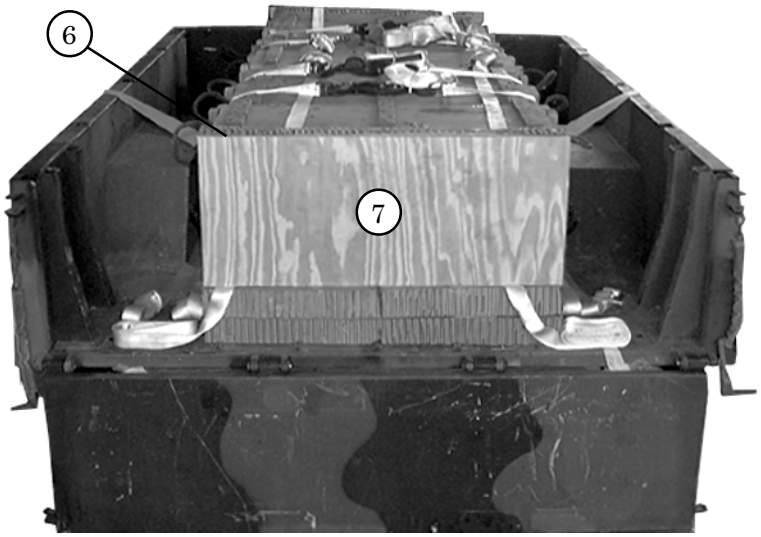

REAR

(6) Place one 15- by 36-inch piece of honeycomb flush against the rear ammunition boxes.

(7) Place one 3/4- by 15- by 36-inch piece of plywood flush against the honeycomb.

Figure 7-16. Ammunition Boxes Lashed and Secured in the Trailer (continued)

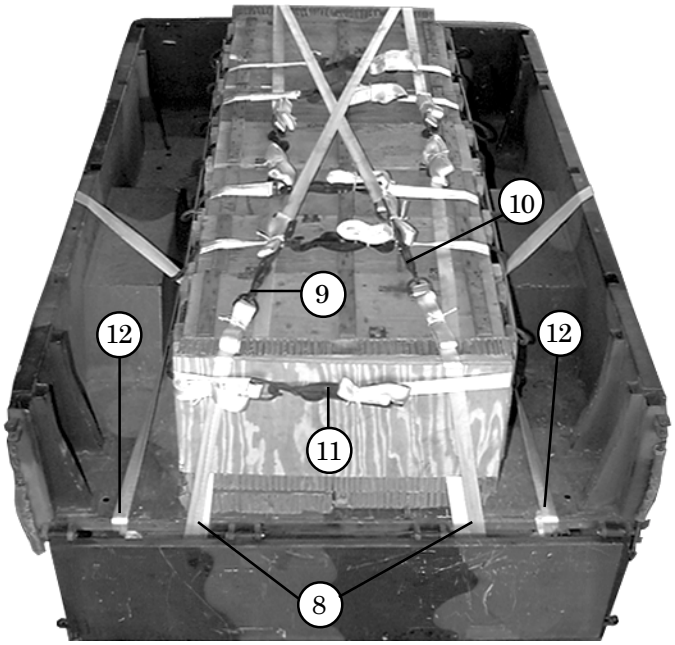

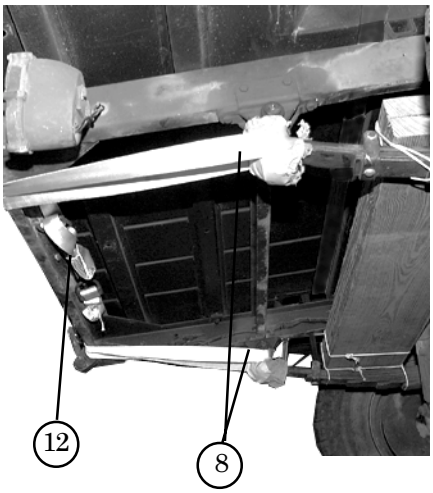

REAR

(8) Pass the free end of each pre-positioned lashing (on the rear of the trailer) between the tailgate and the cargo bed. Pass the ends around the padded rear spring mounted shackle, and back up to the top of the load.

(9) Secure the left rear lashing to the right front lashing with a D-ring and a load binder.

(10) Secure the right lashing to the left front lashing with a D-ring and a load binder.

(11) Pass the free ends of the upper pre-positioned 30-foot lashing (attached to the front endboard) around rear endboard and load bind with a D-ring and a load binder.

(12) Pass the free end of the lower pre-positioned 30-foot lashing (attached to the front endboard) between the tailgate and the cargo bed. Run each lashing to the outside of the mainframe, between the mainframe and under the cargo bed. Secure the lashings together with D-rings and load binders.

Note: Pad sharp areas that touch lashings to avoid metal-to-metal contact.

Figure 7-16. Ammunition Boxes Lashed and Secured in the Trailer (continued)

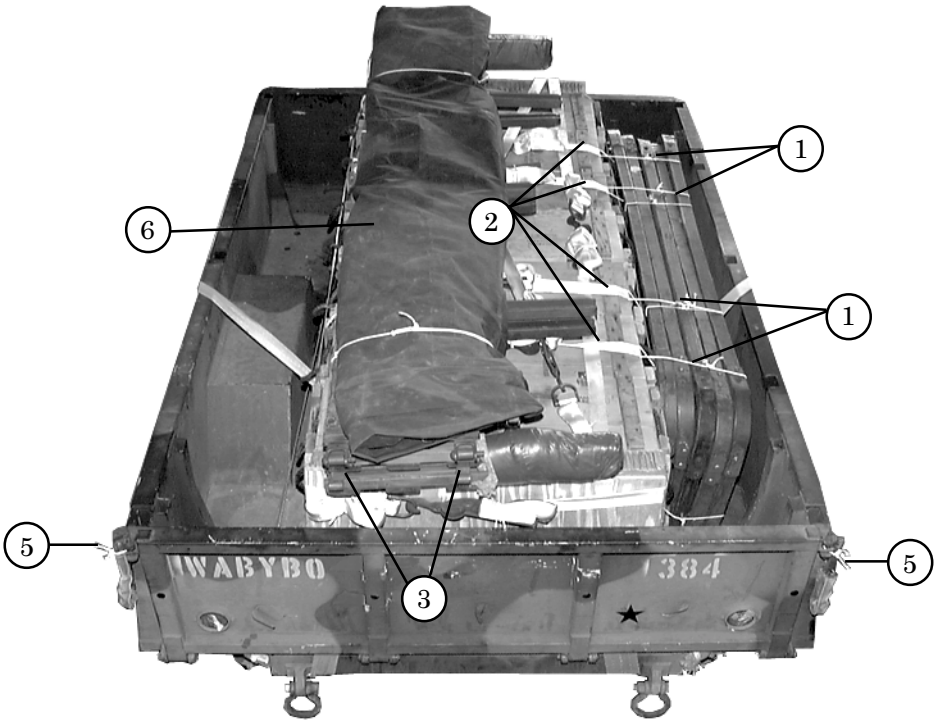

REAR

1. Tie the bows together with type III nylon cord, and place them inside the trailer on the right side.
2. Tie the bows with type III nylon cord to the lashings which run from left to right across the top of the ammunition boxes.
3. Tie the side racks together with type III nylon cord, and place them on top of the ammunition boxes.
4. Tie the side racks with type III nylon cord to the lashings which run from left to right across the top of the ammunition boxes (not shown).
5. Close the tailgate, and tie the latches with type III nylon cord.
6. Lay tarpaulin across side rails and secure with type III nylon cord.

Figure 7-17. Trailer Components Stowed

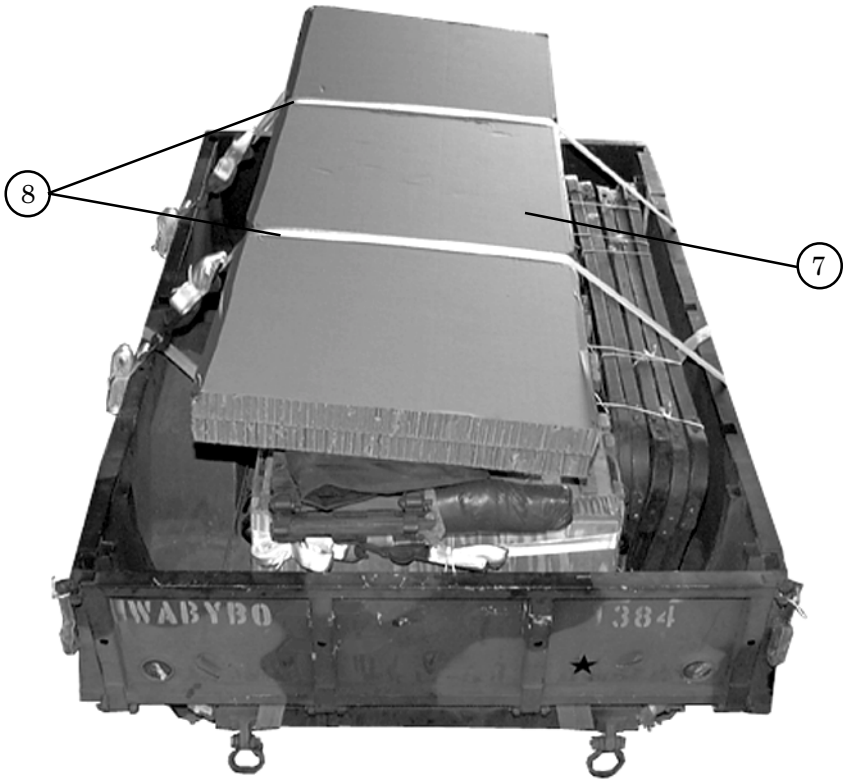

REAR

(7) Place two 36- by 96-inch pieces of honeycomb on top of the tarpaulin. Tape the edges of the honeycomb where the lashings will touch.

(8) Form two 30-foot lashings according to Chapter 3 of this manual. Position one lashing 32 inches from rear of trailer bed and second lashing 69 inches from the rear of trailer bed. Secure the load and trailer components by passing each lashing around the trailer body and frame. Position the load binders off the honeycomb and secure them.

Figure 7-17. Trailer Components Stowed (Continued)

SECURING TRAILER SUPPORT STAND AND INSTALLING LIFTING SLINGS

7-7. Raise and secure the trailer support stand as shown in Figure 7-18. Use three 12-foot (2-loop), type XXVI nylon webbing slings; one 3-foot (2-loop), type XXVI nylon webbing sling; and three medium suspension clevises to lift the trailer.

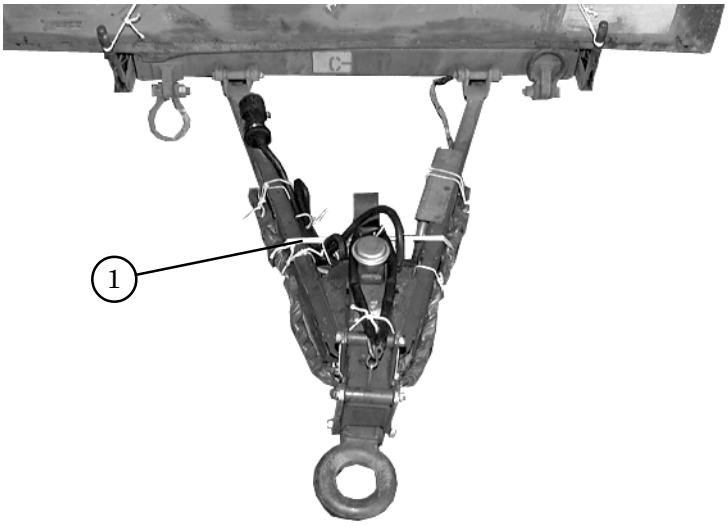

FRONT

1. Raise the support stand, and tie it with 1/2-inch tubular nylon webbing.
2. Place the bell portion of each clevis in the end loop of each 12-foot sling (not shown).
3. Attach the two rear lifting slings to the tie-down provisions on the rear of the trailer (not shown).
4. Pass a 3-foot sling through the lunette on the trailer. Attach the 3-foot sling to the medium suspension clevis (not shown).

Figure 7-18. Trailer Support Stand Raised and Secured

POSITIONING TRAILER

7-8. Position the trailer on the honeycomb stacks according to Figure 7-19.

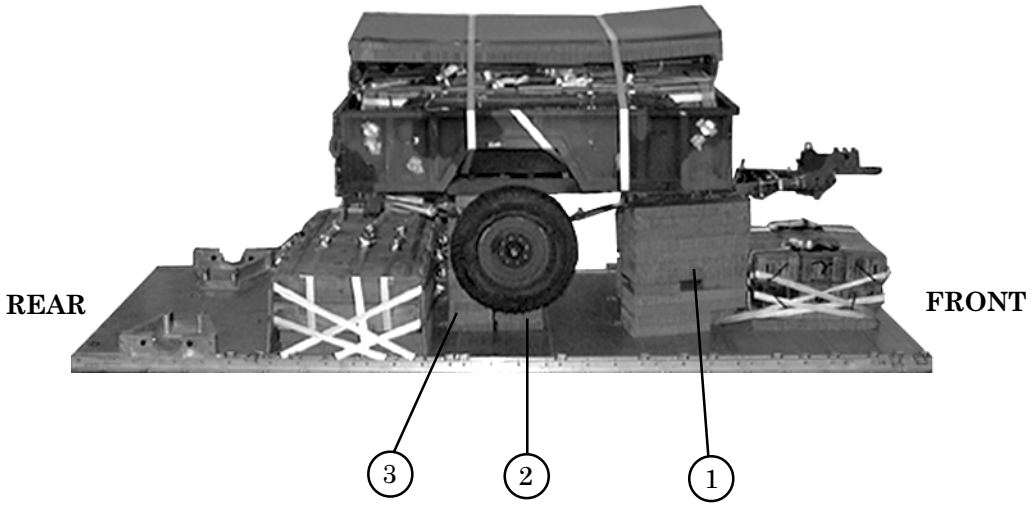

1. Position the drawbar on stack 1.
2. Position the axle on stack 2.
3. Postion the frame support board on stack 3.

Figure 7-19. Trailer Positioned

LASHING TRAILER

7-9. Lash the trailer to the platform according to Chapter 3 of this manual and as shown Figures 7-20 and 7-21.

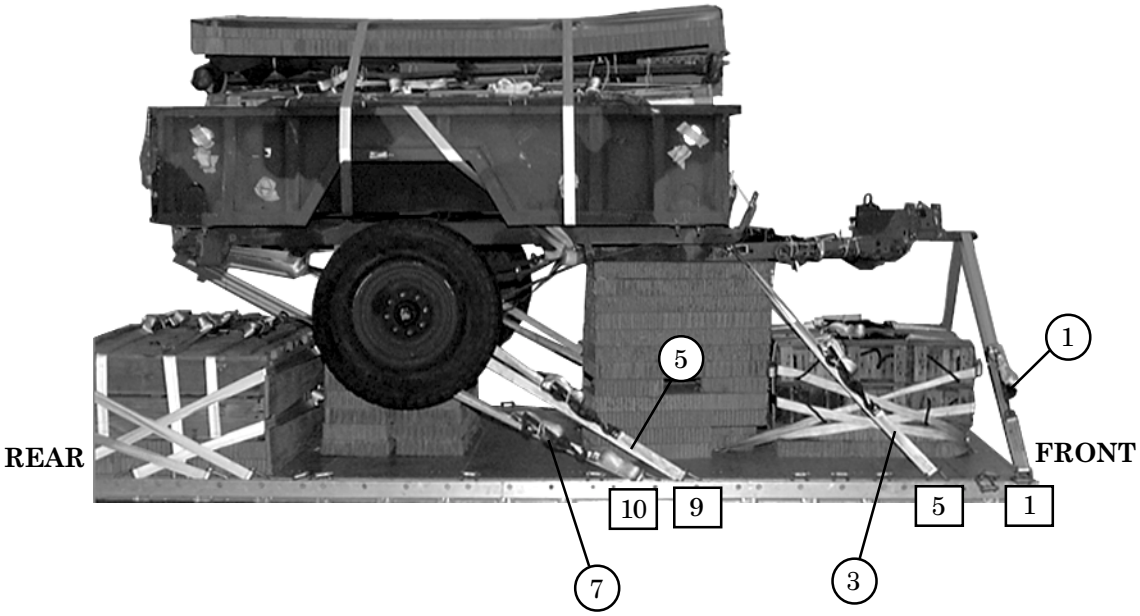

Lashing Number	Tiedown Clevis Number	Instructions
		Pass lashing:
1	1	Through the lunette.
2	1A	Through the lunette.
3	5	Through the right front lifting shackle.
4	5A	Through the left front lifting shackle.
5	9	Around the right side of the axle.
6	9A	Around the left side of the axle.
7	10	Through the right rear lifting shackle using a 30-foot lashing.
8	10A	Through the left rear lifting shackle using a 30-foot lashing.

Figure 7-20. Lashings 1 Through 8 Installed

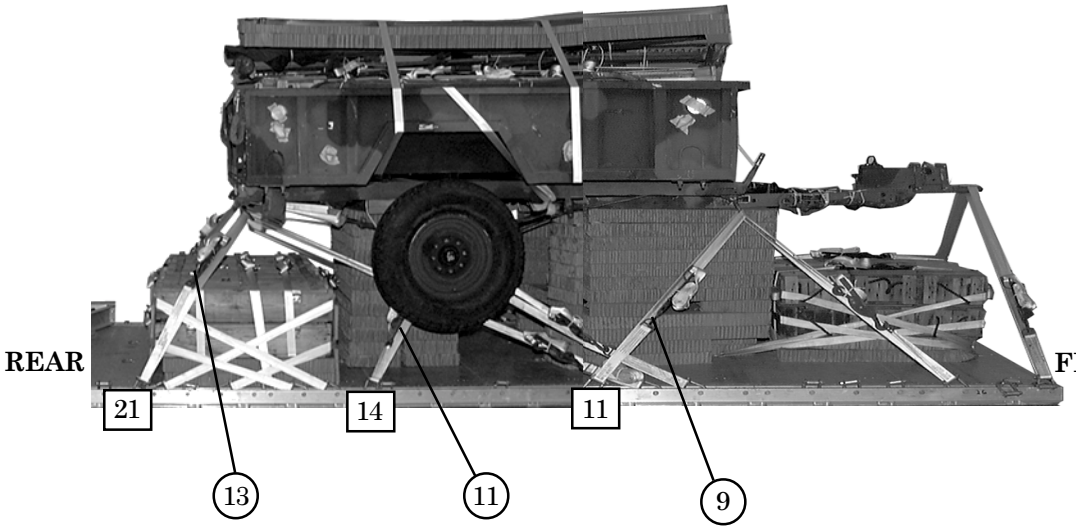

Lashing Number	Tiedown Clevis Number	Instructions
		Pass lashing:
9	11	Through the right front lifting shackle.
10	11A	Through the left front lifting shackle.
11	14	Around the right side of axle.
12	14A	Around the left side of axle.
13	21	Through the right rear lifting shackle.
14	21A	Through the left rear lifting shackle.

Figure 7-21. Lashings 9 Through 14 Installed

BUILDING AND INSTALLING PARACHUTE STOWAGE PLATFORM

7-10. Build the parachute stowage platform as shown in Figure 7-22. Install the parachute stowage platform using four 15-foot tie-down assemblies as shown in Figure 7-23.

Note: This drawing is not drawn to scale.

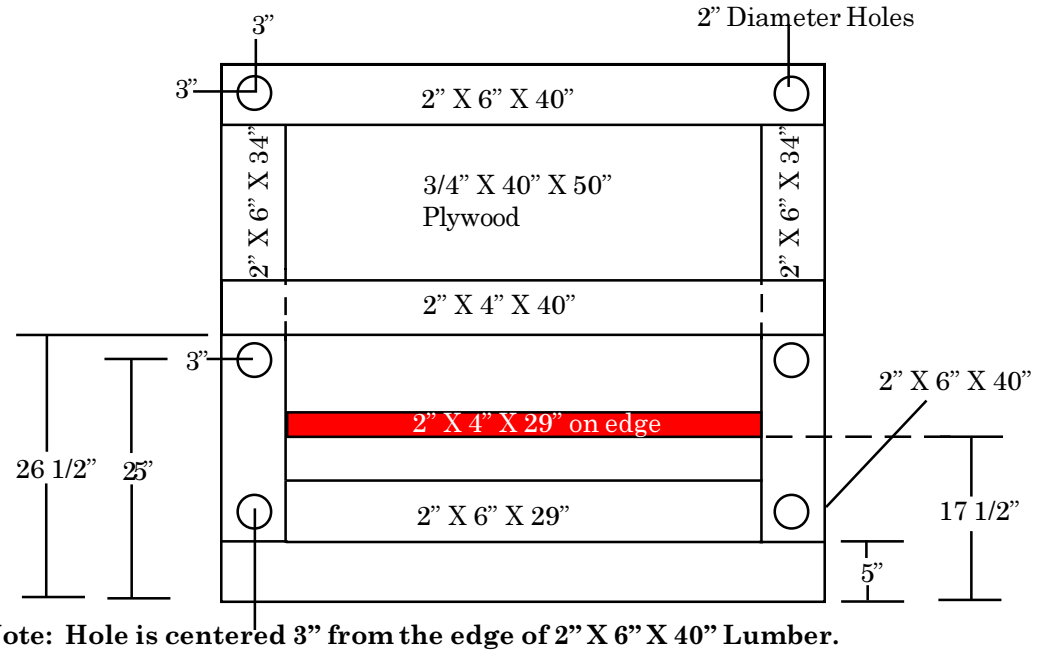

Note: Hole is centered 3” from the edge of 2” X 6” X 40” Lumber.
Use 8d nails to construct the platform.

FRONT

Step:

1. Cut a 3/4- by 40- by 50-inch piece of plywood.

2. Nail a 2- by 6- by 40-inch piece of lumber 5 inches from the front edge of the plywood. Nail a second 2- by 6- by 40-inch piece of lumber flush with the rear edge of the plywood.

3. Nail a 2-by 6- by 34-inch piece of lumber to each side of the plywood as shown.

4. Nail a 2- by 6- by 29-inch piece of lumber on top of the 2- by 6- by 40-inch lumber that is positioned on the front of the plywood.

5. Nail a 2- by 4- by 29-inch piece of lumber standing on edge 17 1/2 inches from the front edge of the plywood.

6. Nail a 2- by 4- by 40-inch piece of lumber 26 1/2 inches from the front edge of the plywood.

7. Drill six 2-inch holes in the lumber as shown.

Figure 7-22. Parachute Stowage Platform Built

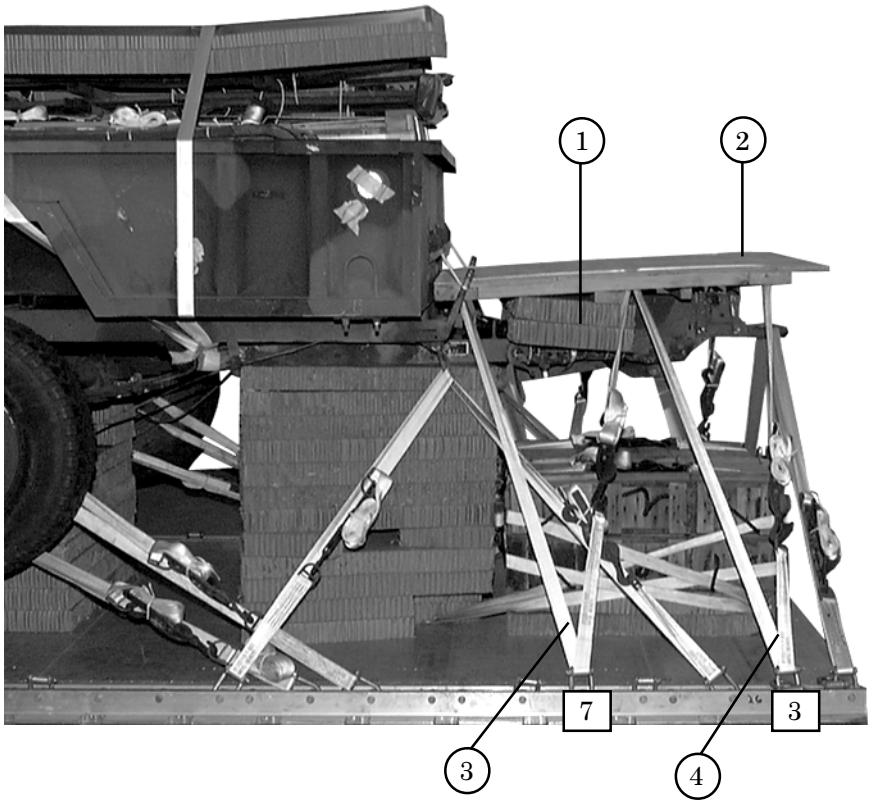

1. Place two 36- by 15-inch pieces of honeycomb on the rear of the drawbar frame.
2. Place the parachute stowage platform on top of the honeycomb with the smooth side of plywood facing up.
3. Run a 15-foot lashing through clevis 7 up through right rear hole of stowage platform and down through center hole to D-ring. Secure with D-ring and a load binder. Repeat for clevis 7A.
4. Run a 15-foot lashing through clevis 3 up through center right hole of stowage platform and down through right front hole of stowage platform to D-ring. Secure with D-ring and a load binder. Repeat for clevis 3A.

Figure 7-23. Parachute Stowage Platform Installed

BUILDING AND POSITIONING ATTITUDE CONTROL SYSTEM (ACS) STACKS

7-11. Build the ACS stacks as shown in Figure 7-24. Position the ACS stacks as shown in Figure 7-25.

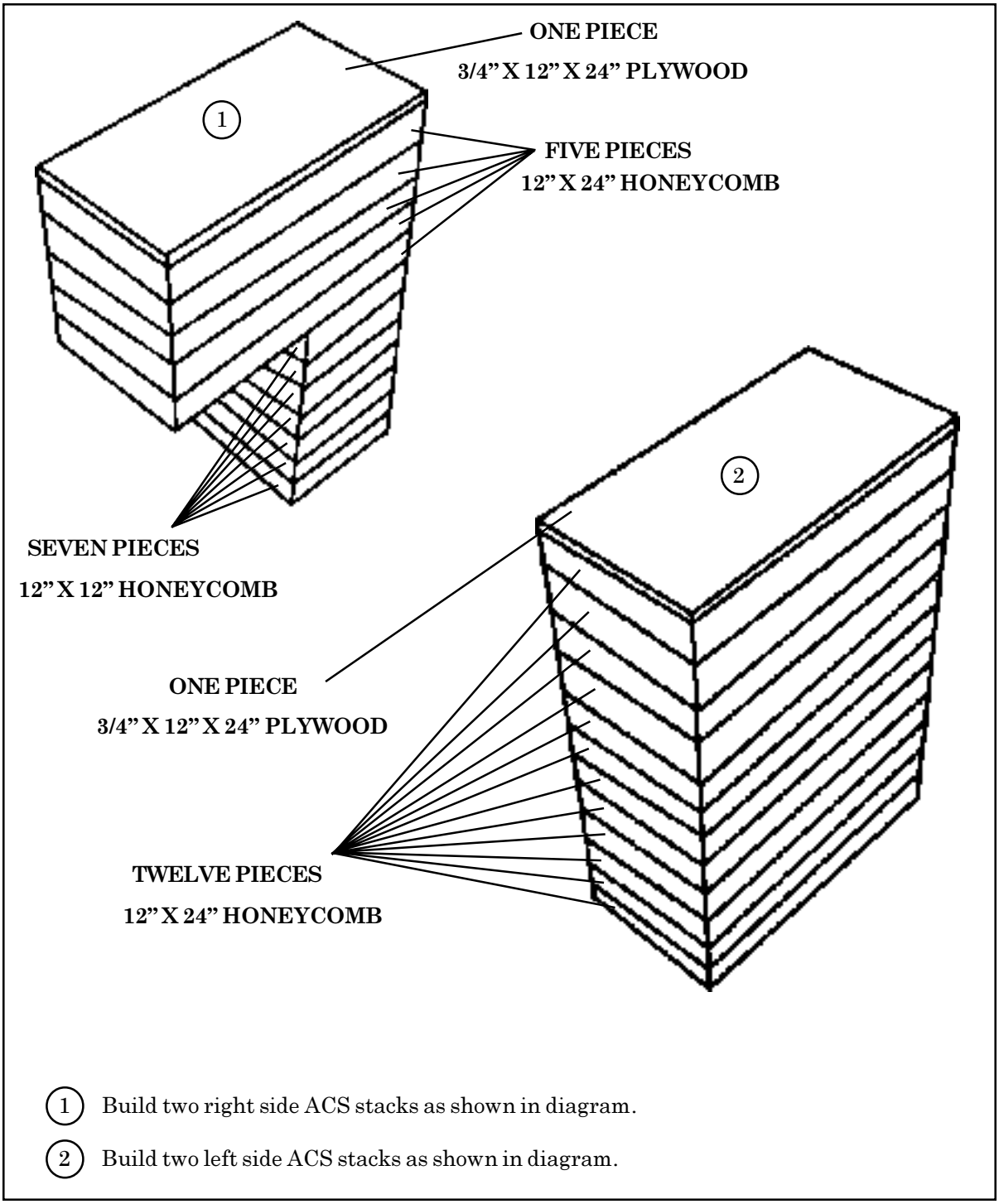

Figure 7-24. ACS Stacks Built

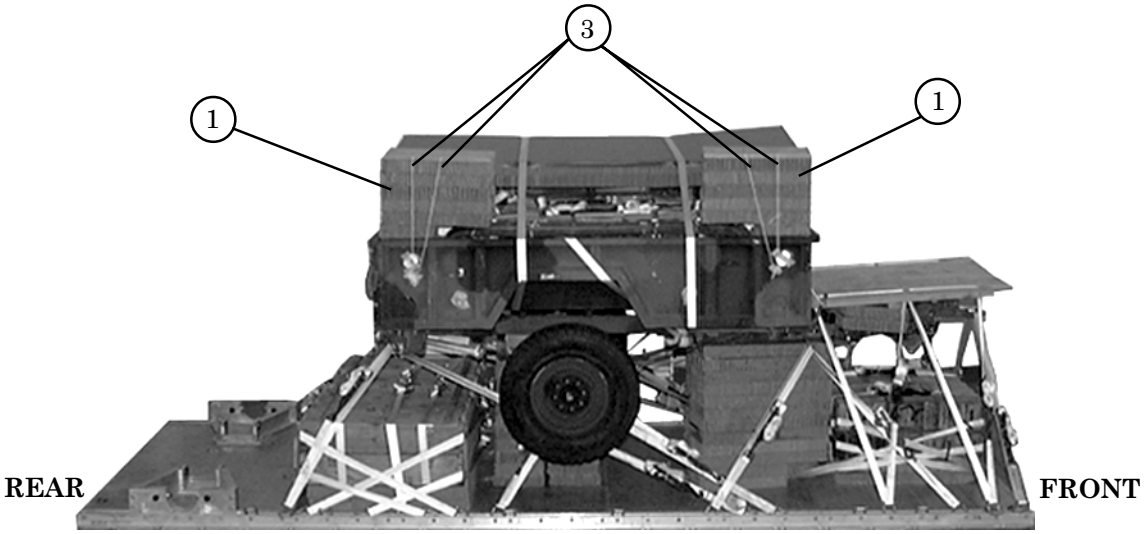

1. Position right side stacks in the floor of right side of the trailer bed as shown.
2. Position left side stacks in the floor of left side of the trailer bed (not shown).

   Note: Ensure stacks are solid and level.

3. Secure stacks with type III nylon cord.

Figure 7-25. ACS Stacks Positioned

INSTALLING SUSPENSION SLINGS AND ATTITUDE CONTROL SYSTEM (ACS)

7-12. Construct, inspect, and position the ACS according to Chapter 3 of this manual and as shown in Figure 7-26. Install the suspension slings and secure ACS according to Chapter 3, and as shown in Figure 7-27.

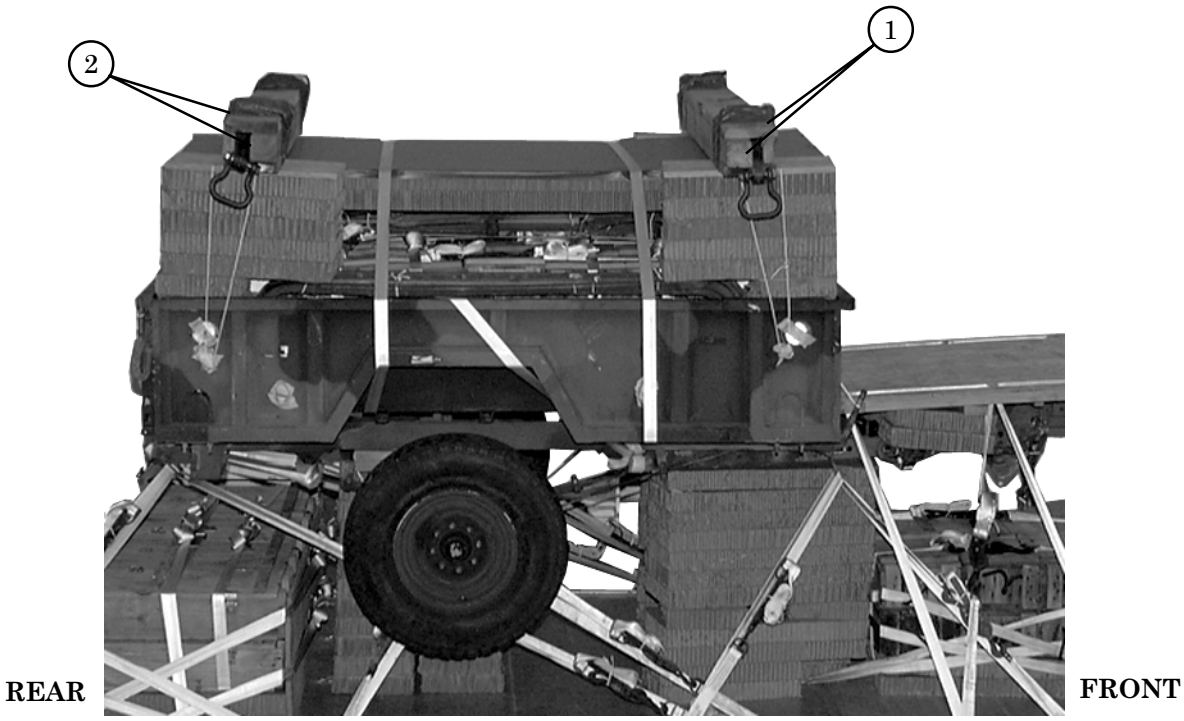

(1) Position the front ACS centered on the front ACS stacks. The ACS 4- by 4-inch lumber must face the rear of the platform.

(2) Position the rear ACS centered on the rear ACS stacks. The ACS 4- by 4-inch lumber must face the front of the platform.

Figure 7-26. ACS Positioned

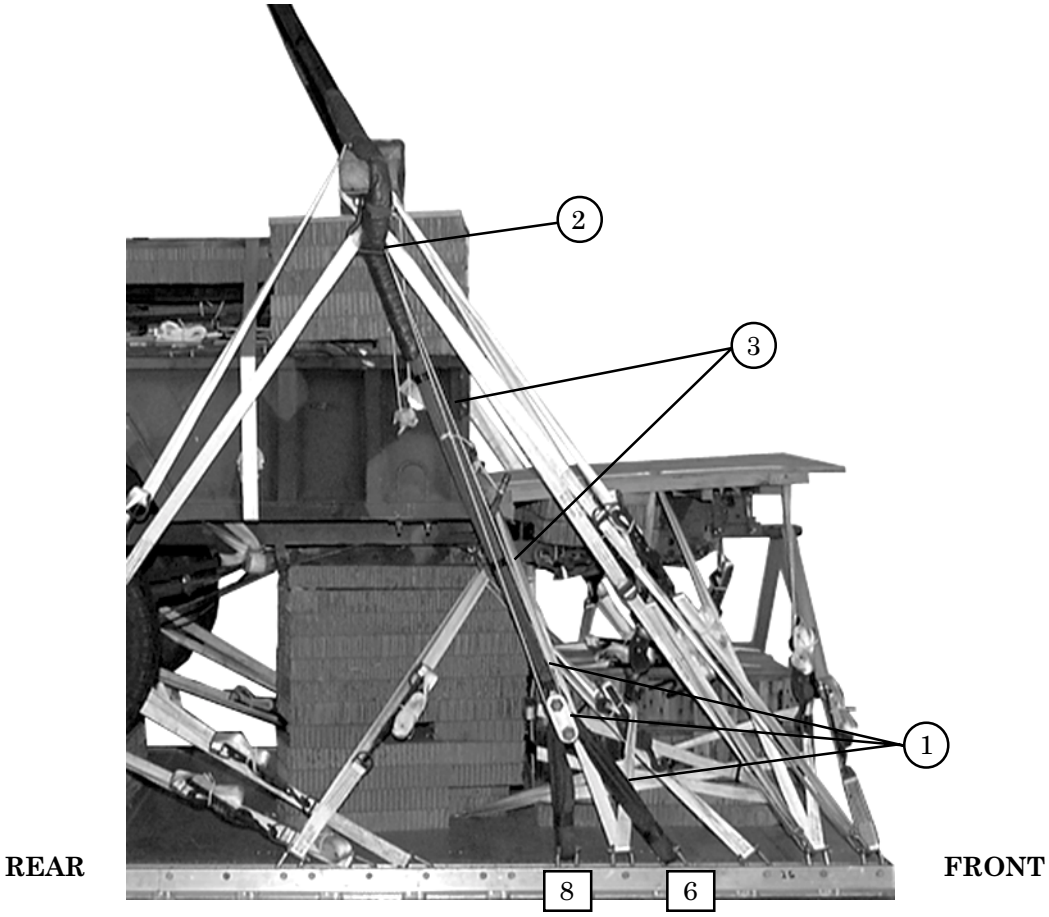

1. Install a 3-foot (4-loop), type XXVI nylon sling to clevises 6 and 8. Connect an 11-foot (4-loop), type XXVI nylon sling to the center of the 3-foot sling with a 3 3/4-inch two point link.

2. Route the sling through the clevis on the ACS from front to rear. Pad and tape the 11-foot sling with felt from a point 6 inches below the clevis to a point 6 inches above the top of the ACS.

3. Safety tie the 3 3/4 inch two point link to the ACS clevis with a loop of type III nylon cord. Ensure the tie is tight.

4. Install a 3-foot (4-loop), type XXVI nylon sling to the other end of the 11-foot sling with a 3 3/4 inch two-point link. Pad and tape the link with felt (not shown).

5. Repeat steps 1 through 4 on the left side of the load using clevises 6A and 8A.

Figure 7-27. Slings Installed and ACS Secured

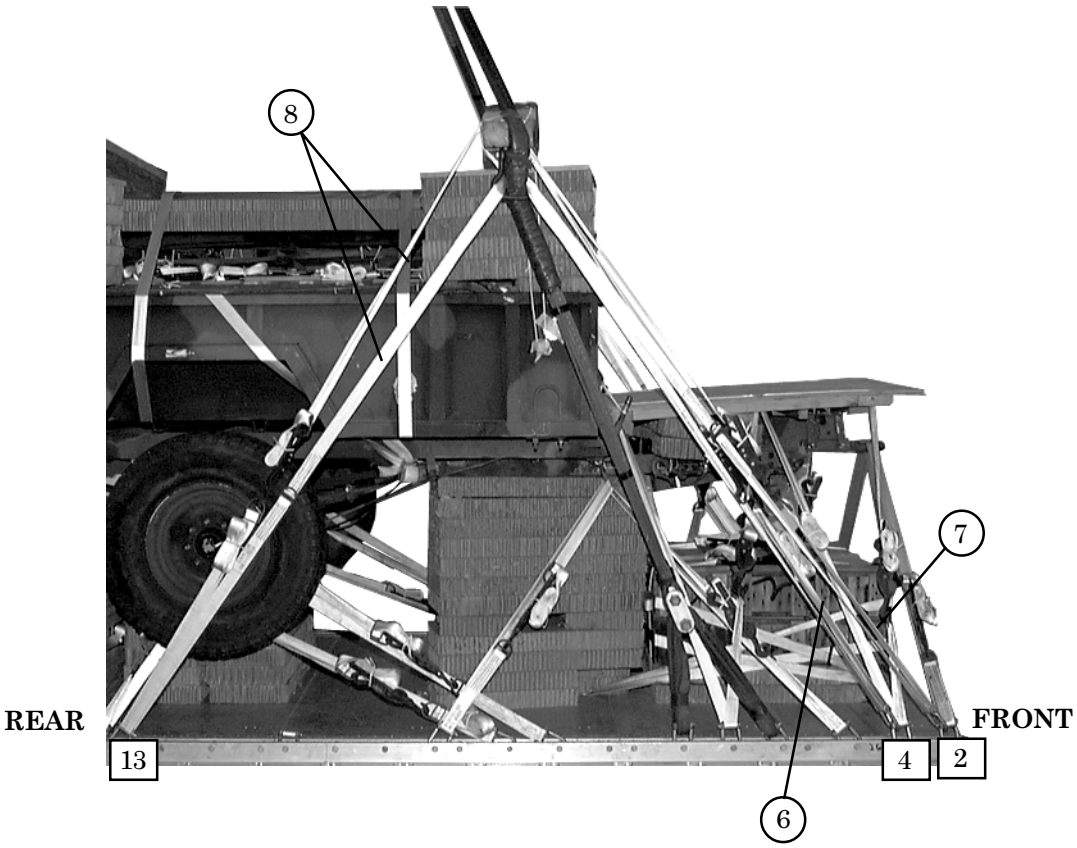

6 Route a 30-foot lashing from clevis 4 through right ACS clevis from outside to inside, rear to front and around the ACS 4- by 4-inch lumber and back to clevis 4.

7 Repeat above step using clevis 2.

8 Route a 30-foot lashing from clevis 13 through right ACS clevis from outside to inside, front to rear and around the ACS 4- by 4-inch lumber and back to clevis 13.

9 Repeat steps 6 through 8 on the left side of load using clevises 2A, 4A, and 13A (not shown).

10 Ensure that the ACS is straight and centered on the load. Load binders on both sides of the load must be closed at the same time in the following sequence: 4 and 4A, 2 and 2A, 13 and 13A.

Figure 7-27. Slings Installed and ACS Secured (Continued)

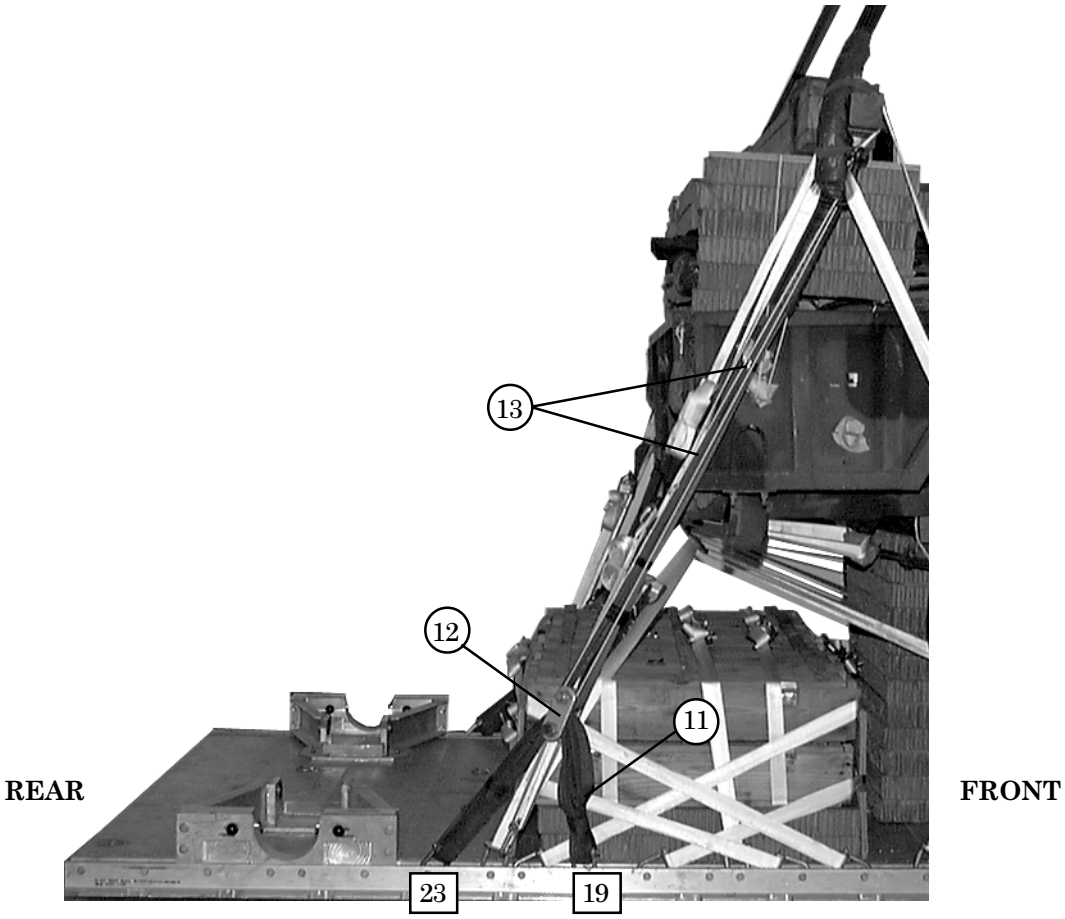

(11) Install a 3-foot (4-loop), type XXVI nylon sling to clevises 19 and 23. Connect an 11-foot (4-loop), type XXVI nylon sling to the center of the 3-foot sling with a 3 3/4-inch two point link.

(12) Route the sling through the clevis on the ACS from rear to front. Pad and tape the 11-foot sling with felt from a point 6 inches below the clevis to a point 6 inches above the top of the ACS.

(13) Safety tie the 3 3/4-inch two-point link to the ACS clevis with a loop of type III nylon cord. Ensure the tie is tight.

(14) Install a 3-foot (4-loop), type XXVI nylon sling to the other end of the 11-foot sling with a 3 3/4-inch two-point link. Pad and tape the link with felt (not shown).

(15) Repeat steps 1 through 4 on the left side of the load using clevises 19A and 23A.

Figure 7-27. Slings Installed and ACS Secured (Continued)

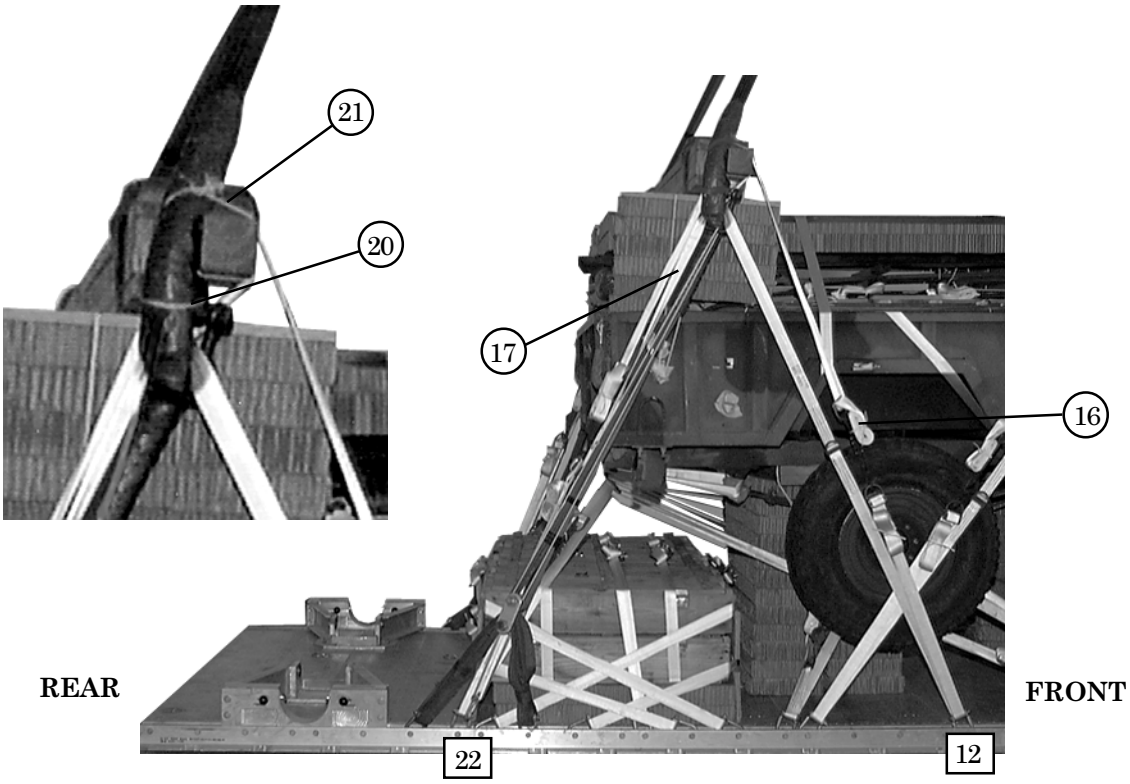

(16) Route a 30-foot lashing from clevis 12 through right rear ACS clevis from outside to inside, rear to front and around the ACS 4- by 4-inch lumber and back to clevis 12.

(17) Route a 30-foot lashing from clevis 22 through right ACS clevis from outside to inside, front to rear and around the ACS 4- by 4-inch lumber and back to clevis 22.

(18) Repeat steps 16 and 17 on the left side of load using clevises 12A and 22A (not shown).

(19) Ensure that the ACS is straight and centered on the load. Load binders on both sides of the load must be closed at the same time in the following sequence: 12 and 12A, 22 and 22A.

CAUTION

Ensure that the ACS is centered width-wise on the load.

(20) Remove all slack from the slings. Tie a length of type III nylon cord around the 11-foot sling and the ACS sling.

(21) Tie a length of type III nylon cord around the 11-foot sling, behind all lashings, and the 4- by 4-inch lumber of the ACS and tie the ends together.

(22) Repeat steps 20 and 21 on all slings (not shown).

Figure 7-27. Slings Installed and ACS Secured (Continued)

INSTALLING OUTRIGGER ASSEMBLIES

7-13. Assemble, install, and safety tie the mast and foot assemblies on the DRAS platform according to TM 10-1670-268-20&P/TO 13C7-52-22 and as shown in Chapter 3, Figures 3-33 through 3-35 and Figure 3-36 steps 1, 2, and 3.

STOWING CARGO PARACHUTES

7-14. Stow and restrain two G-11D cargo parachutes on top of the stowage platform as shown in Chapter 3 and as shown in Figure 7-28.

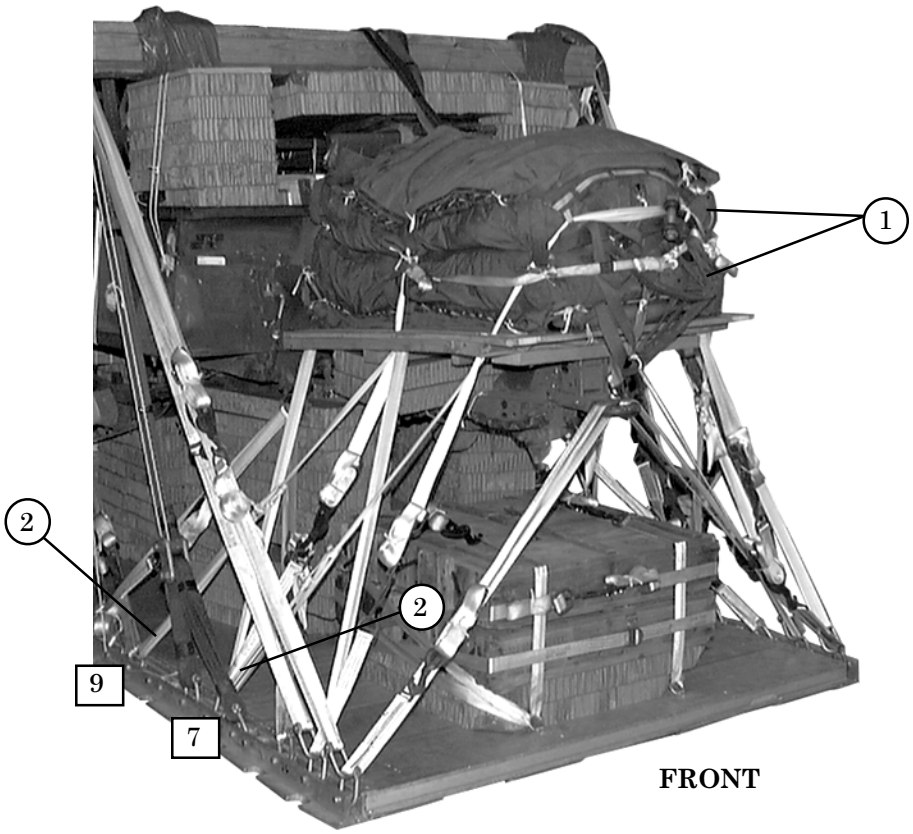

(1) Prepare and install two G-11D cargo parachutes on top of the stowage platform as shown above and in Chapter 3.

(2) Restrain the parachutes as shown in Chapter 3 using type VIII nylon webbing tied to clevises 7, 7A, 9, and 9A.

Figure 7-28. Cargo Parachutes Stowed

STOWING DEPLOYMENT PARACHUTE

7-15. Prepare, stow and install the deployment parachute according to Chapter 3, Section IV and as shown in Figure 7-29.

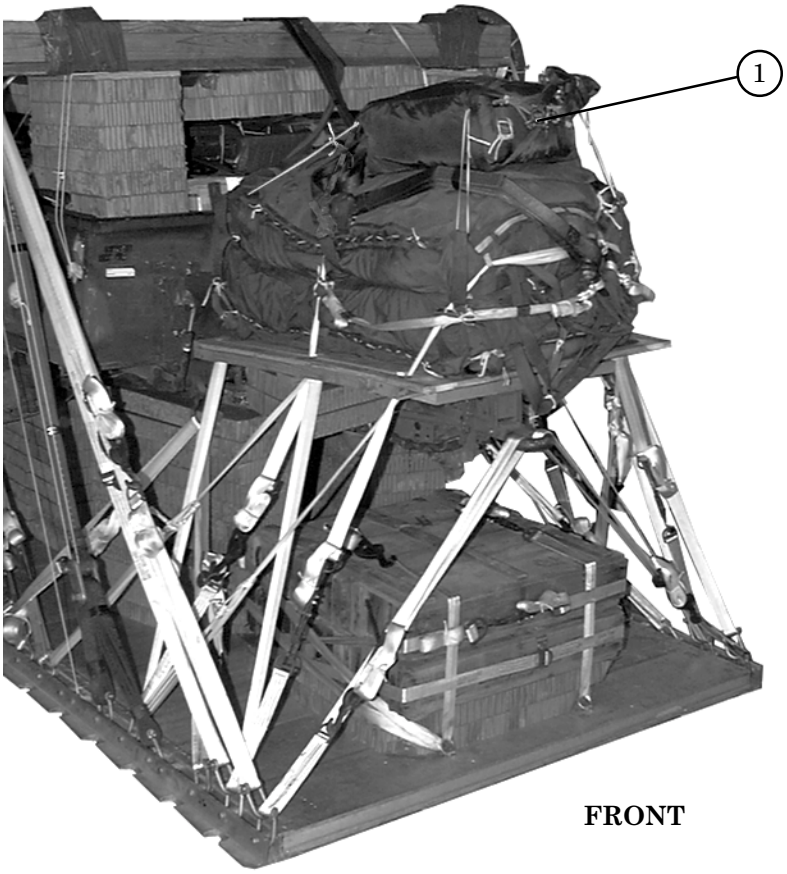

(1) Prepare, stow and install the deployment parachute according to Chapter 3, Section IV and as shown above.

Figure 7-29. Deployment Parachute Installed

INSTALLING PARACHUTE RELEASE SYSTEM

7-16. Build an M-1 parachute release stack, and prepare and install an M-1 release system according to Chapter 3, Section V and as shown in Figure 7-30.

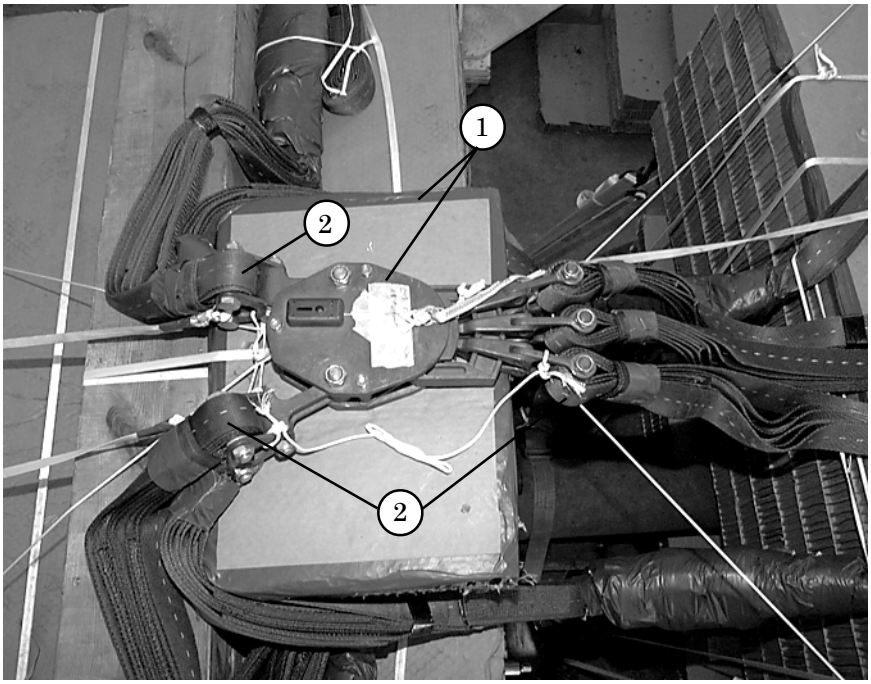

(1) Cut three 20- by 20-inch pieces of honeycomb and glue together to form the M-1 release parachute stack. Tape the top edges of the honeycomb. Center the stack and the M-1 release on the support stack against the rear ACS.

(2) Attach riser extensions and suspension slings to the M-1.

Note: Remove the buffers from the ends of the suspension slings that attach to the M-1.

(3) Group the riser extensions together and tie with type I, 1/4-inch cotton webbing. Make three ties (not shown). S-fold the slack in the front and rear suspension slings on top of front and rear ACS according to Chapter 3 of this manual. Secure with type I, 1/4-inch cotton webbing.

Figure 7-30. Parachute Release System Installed

INSTALLING MAST RELEASE KNIVES

7-17. Install the mast release knives according to Chapter 3, Figure 3-36, Steps 4 through 10 and as shown in Figure 7-31.

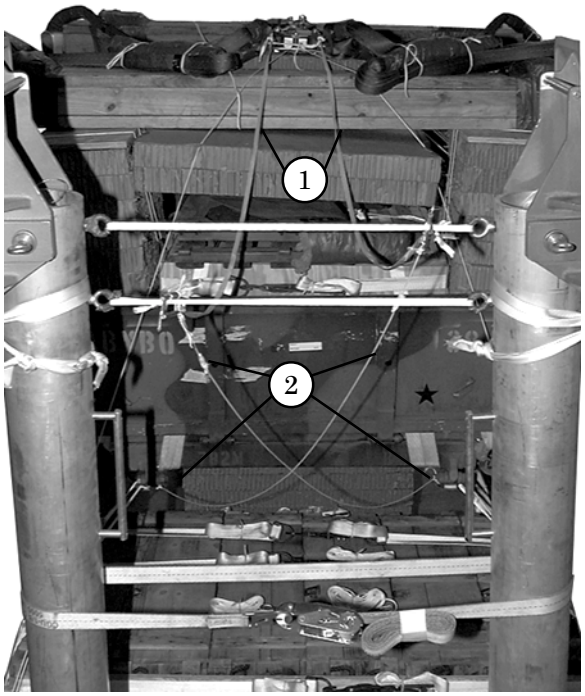

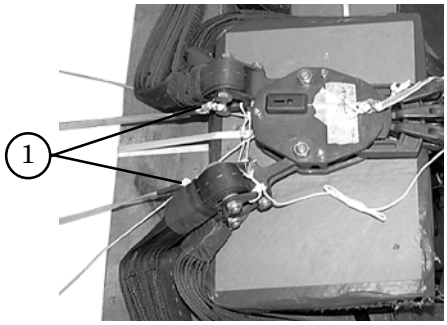

(1) The length of the left and right 1/2-inch tubular nylon webbing from the base of the guillotine knives to the lower suspension links of the M-1 release is 68 inches as shown in Steps 5 and 6 of Figure 3-36.

(2) Tie a length of type III nylon cord to the left rear lifting shackle of the trailer and the right top guillotine knife that measures 76 inches. Repeat for the right side of the trailer using the left lower guillotine knife and the right rear lifting shackle as shown in Steps 9 and 10 of Figure 3-36.

Note: All measurements are from knot to knot.

Figure 7-31. Mast Release Knives Installed

MARKING RIGGED LOAD

7-18. Mark the rigged load according to Chapter 3 of this manual and as shown in Figure 7-32. A Shipper's Declaration for Dangerous Goods is required.

EQUIPMENT REQUIRED

7-19. The equipment required to rig this load is listed in Table 7-1.

CAUTION

Make the final rigger inspection required by Chapter 3 of this manual before the load leaves the rigging site.

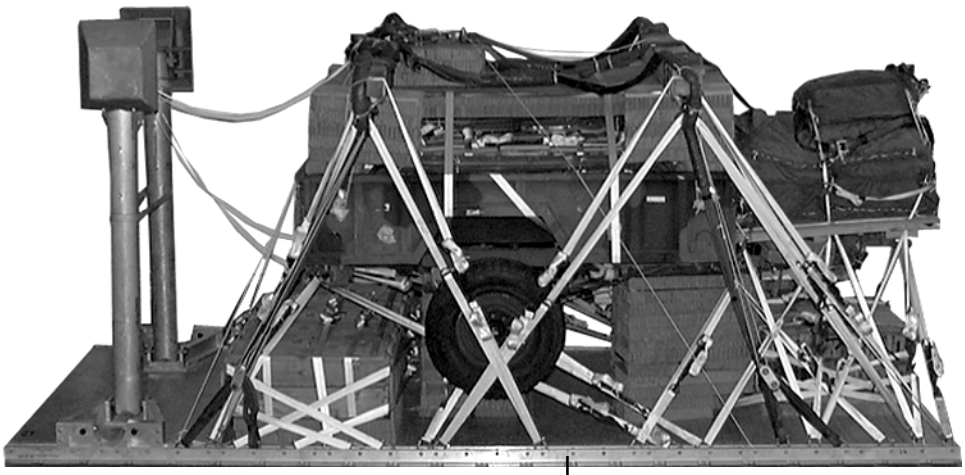

CB

RIGGED LOAD

Weight:	M101A1	7,860 pounds
	Maximum load	8,999 pounds
	M101A2	8,062 pounds
	Maximum load	8,999 pounds
Height		98 inches
Width		94 inches
Length		220 inches
CB (from front edge of platform) M101A1		98 inches
CB (from front edge of platform) M101A2		99 inches

Figure 7-32. M101A1, 3/4-ton Trailer and Accompanying Ammunition Load Rigged for Dual Row Airdrop

Table 7-1. Equipment Required for Rigging the M101A1 or M101A2, 3/4-ton Cargo Trailer with Accompanying Ammunition Load on a Dual Row Platform for Dual Row Airdrop

National Stock Number	Item	Quantity
8040-00-273-8713	Adhesive paste, 1-gal	As required
4020-00-240-2146	Cord, nylon, type III, 550-lb	As required
4030-00-090-5354	Clevis, large	5
4030-00-678-8562	Clevis, medium	4
	Link assembly:	
	Two-point, 3 3/4-in	9
5306-00-435-8994	Bolt, 1-in diam, 4-in long	18
5310-00-232-5165	Nut, 1-in, hexagonal	18
1670-00-003-1953	Plate, side, 3 3/4-in	18
5365-00-007-3414	Spacer, large	18
	Lumber:	
5510-00-220-6146	2- by 4-in	As required
5510-00-220-6148	2- by 6-in	As required
5510-00-220-6274	4- by 4-in	As required
5530-00-618-8073	Plywood, 3/4-in	2 sheets
5315-00-010-4659	Nail, steel wire, common, 8d	As required
1670-00-753-3928	Pad, energy dissipating, honeycomb, 3- by 36- by 96-in	20 Sheets
1670-01-487-5461	Static line assembly release away	1
	Parachute:	
	Cargo:	
1670-01-016-7841	G-11D	2
	Cargo extraction:	
1670-00-040-8135	28-foot (Deployment parachute)	1
	Platform, Dual Row, 18-foot:	
1670-01-485-1654	Rail, DRAS	2
1670-01-486-1342	Roller Pad, DRAS	4
1670-01-486-1656	Panel Assembly, Main	9
1670-01-162-2372	Clevis assembly	46
1670-01-097-8816	Release, cargo parachute, M-1	1

Table 7-1. Equipment Required for Rigging the M101A1 or M101A2, 3/4-ton Cargo Trailer with Accompanying Ammunition Load on a Dual Row Platform for Dual Row Airdrop (continued)

National Stock Number	Item	Quantity
	Sling, cargo airdrop	
	For suspension:	
1670-01-062-6310	11-ft (4-loop), type XXVI nylon webbing	4
1670-01-062-6306	3-ft (4-loop), type XXVI nylon webbing	8
	For deployment:	
1670-01-062-6306	3-ft (4-loop), type XXVI nylon webbing	1
	For riser extension:	
1670-01-062-6313	60-ft (3-loop), type XXVI nylon webbing	2
	For ACS:	
1670-01-063-7761	16-ft (2-loop), type XXVI nylon webbing	2
	For lifting:	
1670-01-062-6301	3-ft (2-loop), type XXVI nylon webbing	1
1670-01-062-6303	12-ft (2-loop), type XXVI nylon webbing	3
1670-00-040-8219	Strap, parachute release, multicut	2
1670-00-937-0271	Knife release, cargo (guillotine)	2
1670-01-487-5464	Outrigger assembly	2
7510-00-266-5016	Tape, adhesive, 2-in	As required
1670-00-937-0271	Tie-down assembly, 15-ft	60
1670-00-725-1437	Tie-down, cargo, aircraft (CGU-1B)	5
	Webbing:	
8305-00-268-2411	Cotton, 1/4-in, type I	As required
	Nylon:	
8305-00-082-5752	Tubular, 1/2-in	As required
8305-00-263-3591	Type VIII	As required

APPENDIX A

VERIFYING THE CENTER OF BALANCE ON A DRAS PLATFORM LOAD

VERIFYING THE CENTER OF BALANCE

A-1. The center of balance (CB) of a DRAS load must be verified and marked on each side of the platform. The pole method and the calculation method are two ways of verifying the CB. The instructions for these methods are given in Figures A-1 and A-2.

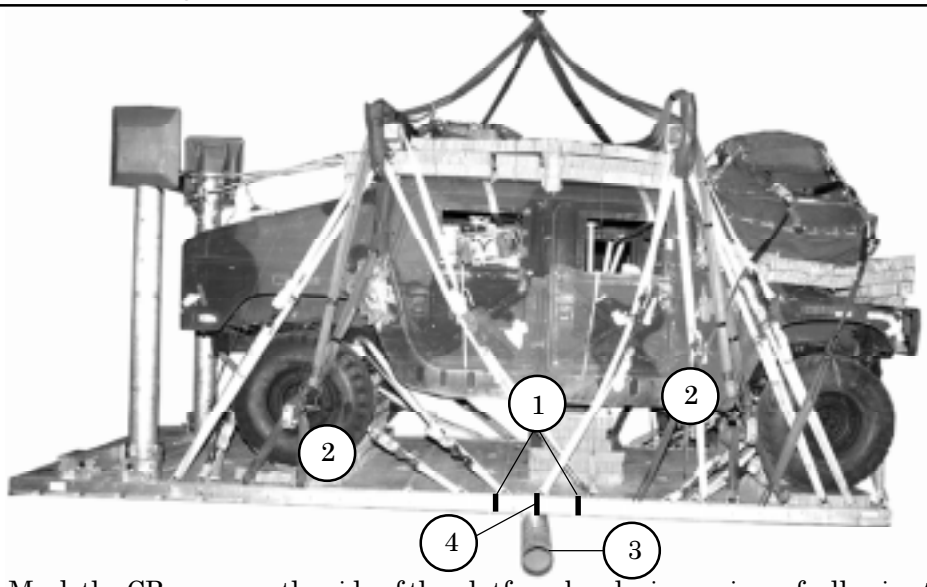

1. Mark the CB range on the side of the platform by placing a piece of adhesive tape 85 inches from the front of the platform and another piece of adhesive tape 99 inches from the front of the platform.

2. Make a lift kit by placing four 11-foot (4-loop), Type XXVI nylon slings on a large clevis. Attach the lift kit sling legs to the 3-foot suspension slings on the front and rear of the platform with medium clevises (if additional length is required add a second medium clevis through the first medium clevis). Ensure the lift kit slings are routed to the front of the front ACS and to the rear of the rear ACS.

3. Raise the load and place a pipe or pole (minimum length of 8 feet and minimum diameter of 6 inches) under the load, perpendicular to the platform, in the CB range.

4. When the load balances, mark the CB on both sides of the platform.

NOTE: The center of balance MUST be within the CB range of 85 - 99 inches from the front of the platform.

Figure A-1. Verifying CB Using the Pole Method

NOTE: Use the lift kit and instructions in Step 2 of Figure A-1 to lift the load.

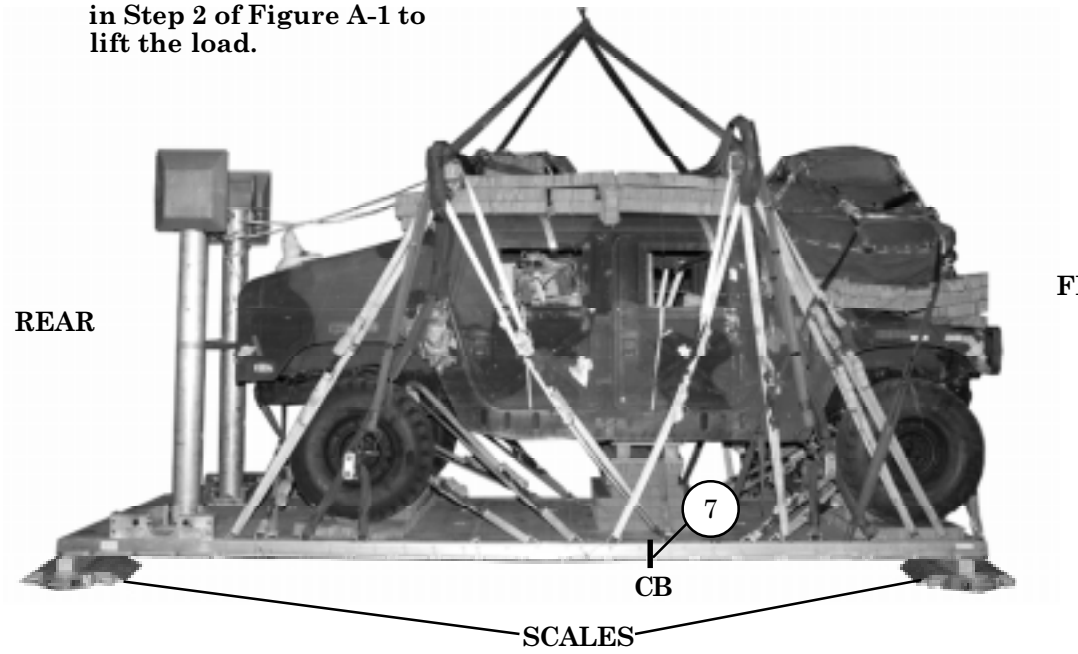

6 $\frac{L \times RW}{TW}$ = CB in inches from front edge of platform

$\frac{216 \text{ inches} \times 4{,}162 \text{ lbs}}{10{,}455 \text{ lbs}}$ = 86 inxhes from front edge of platform

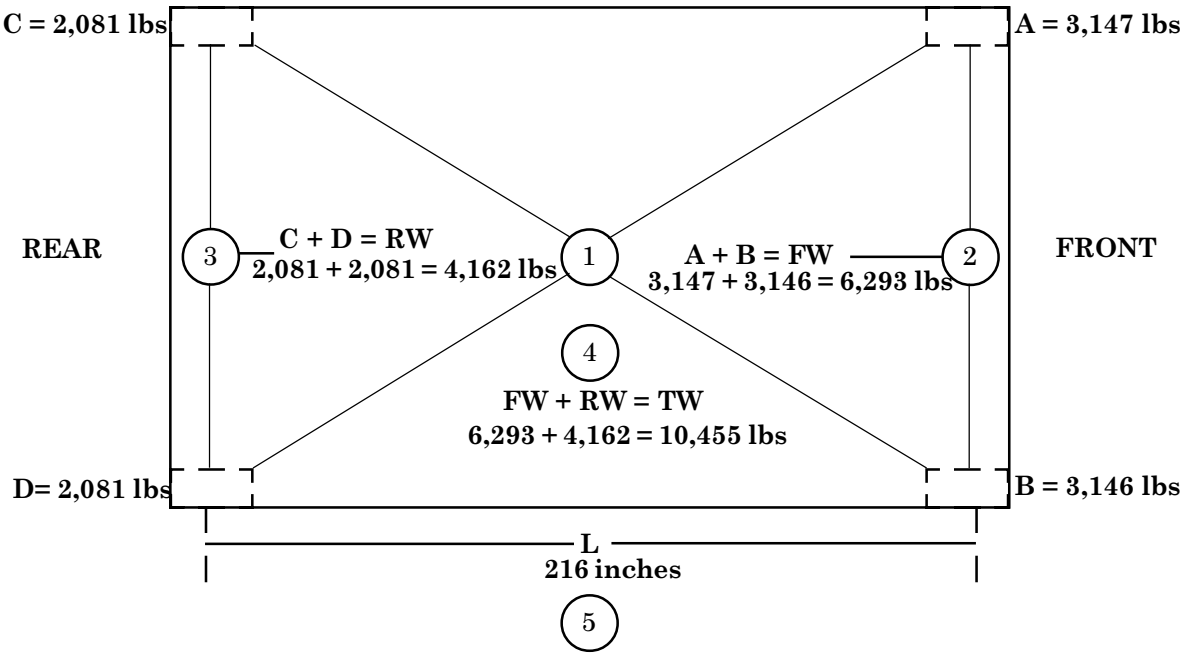

Figure A-2. Verifying CB Using the Calculation Method

1. Place a portable scale under each corner of the DRAS platform. Label the front scales A and B and the rear scales C and D. Place the scales the same distance from the front and rear edge of the platform on both sides.
2. Add the weights of the front scales together (A + B = FW) (FW = Front Weight).
3. Add the weights of the rear scales together (C + D = RW) (RW = Rear Weight).
4. Add the front weight (FW) and the rear weight (RW) together. This equals the total weight (FW + RW = TW) (TW = Total Weight).
5. Measure the distance in inches between the center of the front scale and the center of the rear scale. This equals the length (Length = L).
6. Multiply the length (L) by the rear weight (RW) and divide by the total weight (TW). This equals the center of balance (CB) in inches from the front edge of the platform.
7. Mark the CB on both sides of the platform.

NOTE: The center of balance MUST be within the CB range of 85 - 99 inches from the front of the platform.

Figure A-2. Verifying CB Using the Calculation Method (continued)

GLOSSARY

ACS	attitude control system
AD	airdrop
AFB	Air Force base
AFJMAN	Air Force Joint Manual
AFR	Air Force regulation
AFTO	Air Force technical order
ALC	Airlift Logistics Center
AGL	above ground level
attn	attention
CB	center of balance
chap	chapter
d	penny
DA	Department of the Army
DC	District of Columbia
DD	Department of Defense
diam	diameter
DRAS	dual row airdrop system
fig	figure
FM	field manual
ft	foot/feet
gal	gallon
HMMWV	high mobility multipurpose wheeled vehicle
HQ	headquarters
in	inch
JAI	joint airdrop inspector
lb	pound
MAJCOM	Major Command
LV	low-velocity
LVOSS	Light Vehicle Obscruation Smoke System
MCRP	Marine Corps Reference Publication
mm	millimeter
NSN	national stock number
OVE	on-vehicular equipment
PFA	platform fitting assembly
TM	technical manual
TO	technical order
TRADOC	US Army Training and Doctrine Command
US	United States
wt	weight
w	with
w/o	without
yd	yard

REFERENCES

AFJMAN 24-204(I)/TM 38-250/NAVSUP PUB 505/MCOP4030. Preparing Hazardous Materials for Military Air Shipments. 11 December 2001.

FM 10-500-53/MCRP/TO 13C7-18-41. Airdrop of Supplies and Equipment: Rigging Ammunition. (C1) 24 July 2000.

TM 9-2320-280-10/TO 36A12-1A-2091-1/TM 2320-10/6A. Truck, Utility: Cargo/Troop Carrier, 1 1/4-Ton, 4X4, M998 (2320-01-107-7155). 18 June 1991.

TM 9-2330-202-14&P. Operator's, Organizational, Direct Support and General Support Maintenance Manual Including Repair Parts and Special Tools List for Trailer, Cargo. 10 August 1983.

TM 10-1670-268-20&P/MCRP 4-3.8/TO 13C7-52-22. Organizational Maintenance Manual With Repair Parts and Special Tools List: Type V Airdrop Platform and Dual Row Airdrop Platform. 15 September 2002.

TM 10-1670-277-23&P/TO 13C5-28-2/NAVAIR 13-1-30. Unit and Direct Support (DS) Maintenance Manual (Including Repair Parts and Special Tools List) for Parachute, Cargo Type: 28-Foot Diameter, Cargo Extraction Parachute NSN 1670-01-262-1797 and NSN 1670-00-040-8135, 5 August 1991.

TM 10-1670-280-23&P/TO 13C5-31-2/NAVAIR 13-1-31. Unit and Intermediate Direct Support (DS) Maintenance Manual (Including Repair Parts and Special Tools List) for Parachute, Cargo Type: 100-Foot Diameter, G-11B, G-11C and G-11D, (NSN 1670-01-016-7841). 15 September 2002.

TM 10-1670-296-20&P/TO 13C7-49-2. Unit Maintenance Manual Including Repair Parts and Special Tools List for Ancillary Equipment for Low Velocity Airdrop System. 30 October 2002.

AFTO Form 22. Technical Order Publication Improvement Report

DA Form 2028. Recommended Changes to Publication and Blank Forms. February 1974.

DD Form 1748 Series Joint Airdrop Inspection Record

Shipper's Declaration for Dangerous Goods. Locally procured form.

By Order of the Secretary of the Army:

ERIC K. SHINSEKI
General, United States Army
Chief of Staff

Official:

JOEL B. HUDSON
Administrative Assistant to the
Secretary of the Army
0209501

DISTRIBUTION:

Active Army, Army National Guard, and U.S. Army Reserve: To be distributed in accordance with the initial distribution number 115866, requirements for FM 4-20.105.

LESTER L. LYLES
General, USAF
Command, AFMC

JOHN P. JUMPER
General, USAF
Chief of Staff

PIN: 038615-001