Approved For Release 2000/08/08 : CIA-RDP96-00789R002900280001-0

STAR GATE

~~SECRET~~

DT-S-1029-SL

DEFENSE
INTELLIGENCE
AGENCY

SYMPOSIUM SUMMARY (U)

15 MARCH 1991

STAR GATE

NOFORN

~~SECRET~~

LIMDIS

Approved For Release 2000/08/08 : CIA-RDP96-00789R002900280001-0

Approved For Release 2000/08/08 : CIA-RDP96-00789R002900280001-0

~~S E C R E T~~

SYMPOSIUM SUMMARY (U)
AFTER ACTION REPORT (U)

Date of Publication

15 March 1991

This is a Department of Defense Intelligence Document prepared by the Technology Assessment and Support Office, Directorate for Scientific and Technical Intelligence Defense Intelligence Agency.

PREPARED BY

Technology Assessment and Support Office (DT-S)

NOT RELEASABLE TO FOREIGN NATIONALS

LIMITED DISSEMINATION

REPRODUCTION REQUIRES
APPROVAL OF ORIGINATOR
OR HIGHER DOD AUTHORITY

FURTHER DISSEMINATION
ONLY AS DIRECTED BY DT
OR HIGHER DOD AUTHORITY

CLASSIFIED BY: DIA/DT
DECLASSIFY ON: OADR

~~S E C R E T~~ / NOFORN / LIMDIS
STAR GATE

Approved For Release 2000/08/08 : CIA-RDP96-00789R002900280001-0

Approved For Release 2000/08/08 : CIA-RDP96-00789R002900280001-0

TABLE OF CONTENTS

Page

I. PURPOSE 1

II. SCOPE 1

III. BACKGROUND 2

IV. SUMMARY 3

V. BENEFITS GAINED FROM ATTENDANCE 5

VI. DRAWBACKS 9

V. SUGGESTED FOLLOW ON ACTIONS/RECOMMENDATIONS 10

APPENDIX A: CONFERENCE AGENDA A-1

APPENDIX B: EXISTING ESP TESTING DEVICE B-1

APPENDIX C: PROPOSED ESP TESTING DEVICE C-1

Approved For Release 2000/08/08 : CIA-RDP96-00789R002900280001-0

Approved For Release 2000/08/08 : CIA-RDP96-00789R002900280001-0

SYMPOSIUM SUMMARY (U)
AFTER ACTION REPORT (U)

I. (U) PURPOSE:

(S/SG/NF/LIMDIS) The purpose of this document is to provide an after action report from attendees at the Atlantic University Consciousness Symposium held on 16-17 February 1991 at Virginia Beach, VA.

II. (U) SCOPE:

(U) This report provides highlights of the symposium; including benefits, lessons learned, and recommendations for follow-on actions.

CLASSIFIED BY: DIA/DT
DECLASSIFY ON: OADR

Approved For Release 2000/08/08 : CIA-RDP96-00789R002900280001-0

Approved For Release 2000/08/08 : CIA-RDP96-00789R002900280001-0

III. (U) BACKGROUND:

(U) Atlantic University is a small facility located in Virginia Beach, VA. This University specializes in broad interdisciplinary topics that include the study of transpersonal psychology, human consciousness and paranormal phenomena. Occasionally, Atlantic University holds seminars that address specialized topics such as parapsychology and related fields.

(S/SG/NF/LIMDIS) This particular conference had several specific parapsychological topics of interest to DT-S personnel, covering both practical and theoretical/speculative aspects.

(U) Atlantic University is co-located (but not part of) a large private funded foundation (the Edgar Cayce Foundation). The Cayce Foundation has extensive conference facilities and a large library that contains historical data as well as current research on parapsychology.

Approved For Release 2000/08/08 : CIA-RDP96-00789R002900280001-0

Approved For Release 2000/08/08 : CIA-RDP96-00789R002900280001-0

IV. (U) SUMMARY:

(S/SG/NF/LIMDIS) Five members of DT-S attended the symposium: The Branch Chief, the S&T Officer (attached to DT-S) and three Project Officers.

(S/SG/NF/LIMDIS) There were 16 presentations and several panel discussions in this two day conference that examined various issues of consciousness including parapsychology. The primary focus was on phenomena interpretations and on various application pursuits. Some of the papers examined psychological and medical viewpoints. Most of the papers presented were of interest to DT-S personnel, and some presentations, such as "On Becoming A Parapsychologist" and on "Extrasensory Perception Using Lucid Dreaming", were of special interest. There were some papers that were not pertinent to DT-S needs, such as those on healing and on psychological case work. A list of all papers presented is at Appendix A.

(C) This conference permitted DT-S personnel to gain first hand insight from people who are pursuing research and applications in this area. Not all the viewpoints presented were consistent or clearly stated; however, their diverse perspectives did provoke healthy dialogue and led to some new ideas. At least one new research avenue was identified that will be examined in more detail.

Approved For Release 2000/08/08 : CIA-RDP96-00789R002900280001-0

Approved For Release 2000/08/08 : CIA-RDP96-00789R002900280001-0

(U) Of special interest was the institute's library; this material will be highly useful for data base and historical review purposes.

(U) It was agreed that the symposium was very interesting and the trip was worthwhile. It is highly recommended that DT-S personnel take advantage of similar conferences/symposia in the future.

Approved For Release 2000/08/08 : CIA-RDP96-00789R002900280001-0

Approved For Release 2000/08/08 : CIA-RDP96-00789R002900280001-0

V. (U) BENEFITS GAINED FROM ATTENDANCE:

(S/SG/NF/LIMDIS) There were many benefits gained from attending this symposium. Each individual that attended learned something new about the field. Post-symposium discussions with office personnel that did not attend provided information to all DT-S personnel. DT-S overall benefited by having an additional source for obtaining subject related material and publications by the use of the extensive library of the Edgar Cayce Foundation. This library contains a concentration of literature on the subject matter which is not readily available in one place within such an accessible distance.

(U) Additional benefits from attendance are as follows:

1. (S/NF) The symposium gave office personnel an introduction to one portion of the subject related community and familiarized S&T personnel with various aspects of the subject matter.

2. (U) It provided insight as to what to expect from such conferences and prepared office personnel for future symposia of this kind.

3. (S/NF) DT-S personnel gained new ideas by meeting people who are working in the field and learned of initial results of experimentation concerning those ideas.

Approved For Release 2000/08/08 : CIA-RDP96-00789R002900280001-0

Approved For Release 2000/08/08 : CIA-RDP96-00789R002900280001-0

4. (U) Morale and inter-personnel cohesiveness was greatly enhanced by social contact over the weekend.

5. (S/NF) It allowed office personnel to see an array of methodologies that exist in the community at large and make contact with people that subscribe to those methodologies.

6. (S/SG/NF/LIMDIS) It revealed new concepts for us to evaluate for future use. For example, the paper on "Lucid Dreaming" generated interest for possible experimentation in the future and some "breathing techniques" presented in another paper may be worthwhile to try.

7. (S/NF) It helped us to maintain healthy skepticism, and define standards. Some procedures/concepts that work well for a particular person may not be feasible for our interests.

8. (S/SG/NF/LIMDIS) DT-S personnel were able to see some very "good examples" and also some "bad examples" of psychic research and approaches used by various practitioners in attendance. It allowed office personnel to reaffirm the respect they feel for those who have kept their scientific drive in this field. This reinforced a conviction to strive for maintenance of scientific standards within our work.

Approved For Release 2000/08/08 : CIA-RDP96-00789R002900280001-0

Approved For Release 2000/08/08 : CIA-RDP96-00789R002900280001-0

9. (S/SG/NF/LIMDIS) Two office personnel acquired access to an antique "ESP" machine, property of the Edgar Cayce Foundation. One project officer examined this machine thoroughly and drew up operating diagrams (Appendix B). Post-symposium study of these diagrams have led to the creating of a computerized model with greatly enhanced capabilities; using the equipment we have on hand, and easily converted to our new ADP system (Appendix C).

SG1B

[redacted]

11. (S/SG/NF/LIMDIS) Post-symposium discussion of the papers presented has sparked new interest in our work and has generated several new ideas for experimentation. This will ultimately help in our design and acquisition of the correct research and ADP equipment, as well as provide new methods of performance and added proficiency.

Approved For Release 2000/08/08 : CIA-RDP96-00789R002900280001-0

Approved For Release 2000/08/08 : CIA-RDP96-00789R002900280001-0

12. (S/SG/NF/LIMDIS) Overall, the symposium was extremely worthwhile. The right number of DT-S personnel attended and each one benefited. Considering the broad scope of topics, it was beneficial to have both staff members as well as remote viewers in attendance. Other DT personnel would not have a need to attend. Considering the small size of the room and holding only about 75 people, our five members fit in nicely. If more DT-S personnel had attended, we would have drawn attention. Conference attendance should be limited, but not restricted.

Approved For Release 2000/08/08 : CIA-RDP96-00789R002900280001-0

Approved For Release 2000/08/08 : CIA-RDP96-00789R002900280001-0

VI. (U) DRAWBACKS:

(S/SG/NF/LIMDIS) Although, there were many benefits from attending this symposium, there were a few drawbacks. One of the main drawbacks was that some of the speakers were too closely linked with the viewpoints of the host facility (ie, the Cayce Foundation). With the Atlantic University symposium being held in the same building as the Edgar Cayce Foundation, it is probably inevitable. We now know to expect such a link in the future.

(S/SG/NF/LIMDIS) Most papers were extremely interesting. However, there were some papers that did not directly apply to our research in this area. There were two papers dealing with "Healing" that were not pertinent to our needs, one paper on "Schizophrenia", one paper on "Dissociation and Multiple Personality Disorder", and a few others.

Approved For Release 2000/08/08 : CIA-RDP96-00789R002900280001-0

Approved For Release 2000/08/08 : CIA-RDP96-00789R002900280001-0

VII. (U) SUGGESTED FOLLOW ON ACTIONS/RECOMMENDATIONS:

A. (U) New Concepts/ideas proposed from information gained at the symposium: The scientifically-oriented papers sparked our interest in several new aspects of the field and we will keep current with progress in these areas. A few of the practitioner's papers could have benefits to our unique needs. Examples of ideas that we could explore include:

1. (S/SG/NF/LIMDIS) Lucid dreaming as a remote viewing technique. One researcher presented information on lucid dreaming, a dream-like state in which the person is in control of the dream content. Evidence was presented that strongly indicates this approach may have remote viewing application potential. Literature on the subject was presented, and later investigation in the Edgar Cayce library indicated that a wealth of written material existed on the subject. Lucid dreaming should be studied to determine whether or not we can use it as a remote viewing technique. A survey of available literature on the subject should be made, and further time should be spent at the Edgar Cayce library to fully exhaust their material. Post symposium discussion on this subject generated much interest and it also will be a topic for discussion at a future off-site meeting.

Approved For Release 2000/08/08 : CIA-RDP96-00789R002900280001-0

Approved For Release 2000/08/08 : CIA-RDP96-00789R002900280001-0

2. (S/SG/NF/LIMDIS) The establishment of mental communication links. One practitioner who practices a form of mental communication discussed concepts involving "different lines of communication". Her terminology was difficult to grasp since it relied on concepts drawn from yoga literature. In our own, more scientific terminology, these lines (or links) would be called communication on a conscious level, on the subconscious or emotional level, and via the autonomic nervous systems. Such a distinction could make a difference in the techniques we currently use. One, for example, is in the practice of Beacon Person Targeting (BPT). At present, we send a person out to the site to act as a beacon. This person stands around the target site, looking at the area in a random fashion for a specified amount of time, then returns to the office. It might be possible to gain more accurate information if the beacon were a trained viewer, who attempts to synchronize his psychological state with the actual viewer's state. This possibility will be investigated.

3. (S/SG/NF/LIMDIS) Physical preparation for sessions. The same practitioner believed she had gained enhanced performance through a specific controlled breathing technique before a parapsychological session. Would such physical preparation be beneficial to us? Only an attempt would tell. One of the project viewers plans to

Approved For Release 2000/08/08 : CIA-RDP96-00789R002900280001-0

Approved For Release 2000/08/08 : CIA-RDP96-00789R002900280001-0

investigate this possibility in conjunction with future training projects. Records of session evaluations with and without this practice will be kept to evaluate whether or not such actions are beneficial to his performance.

4. (S/SG/NF/LIMDIS) The application of concentration aids to initiate the parapsychological process. One other practitioner uses certain concentration aids (such as photographs/handprints) to help analyze the health status of a doctor's patients. A very good success rate was reported by doctor involved. In a demonstration, the practitioner showed examples and discussed the methodology. Could highly specialized targeting aids such as a target person's fingerprints facilitate our findings? While such an aid might benefit our working environment when we are targeted against personalities, there is doubt that the trouble involved in acquiring such aids would be worth any increase in acquired information.

B. (U) Other possible actions resulting from this conference include:

1. (S/SG/NF/LIMDIS) Use should be made of the Edgar Cayce Foundation's extensive library. This library has a wide variety of historical data and recent research findings in broad parapsychological topics. It is anticipated that special trips to this library for select review/research would be of benefit, especially in asserting the long range planning activity.

Approved For Release 2000/08/08 : CIA-RDP96-00789R002900280001-0

Approved For Release 2000/08/08 : CIA-RDP96-00789R002900280001-0

2. (S/SG/NF/LIMDIS) Parapsychological "proficiency stabilization" technique development. Appendix C shows plans for a device that can be developed with existing DT-S equipment. This is based on the extrasensory perception (ESP) testing device available at the Cayce Foundation. This device could be of benefit for initial training and could facilitate practice.

3. (S/SG/NF/LIMDIS) Further attendance at symposia and conferences. It is strongly recommended that DT-S attend similar symposia and/or conferences in the future. First hand contact with others pursuing this area is highly beneficial. Other conferences were identified at this symposium and include: (1) A similar conference scheduled one year from now at Atlantic University; (2) A short term, one week, psychic development and research project at the Cayce Foundation, 17-23 Feb 1991; (3) A one-day Psychic Training Seminar scheduled for 6 April 1991 in the Washington D.C. area; and (4) A summer study activity at Dr. J.B. Rhine's former institute in the Durham, N.C. area in August 1991. Of these, the one-day seminar in the Washington area is the most feasible for the near term. Some DT-S personnel already plan to attend a major parapsychology conference (the 34th Annual Parapsychological Association Conference) that is scheduled for August 1991.

Approved For Release 2000/08/08 : CIA-RDP96-00789R002900280001-0

Approved For Release 2000/08/08 : CIA-RDP96-00789R002900280001-0

SCHEDULE
1991 ATLANTIC UNIVERSITY CONSCIOUSNESS SYMPOSIUM

Saturday, February 16, 1991

8:30 AM - 9:00 AM	Registration
9:00 AM - 9:05 AM	Welcome To Atlantic University Kieth VonderOhe, Administrative Dean
9:05 AM - 9:15 AM	Announcements Douglas G. Richards, Atlantic University
9:15 AM - 9:45 AM	David McMillin, Atlantic University "The Treatment of Schizophrenia: A Holistic Approach"
9:45 AM - 10:15 AM	Richard Griffin, Hampton, VA "Dissociation and Multiple Personality Disorder"
10:15 AM - 10:45 AM	BREAK
10:45 AM - 11:15 AM	J. W. "Ike" Eisenhower, Newport News, VA "The Inner Self Helper in Multiple Personality Disorder"
11:15 AM - 11:45 AM	Stase Michaels, Atlantic University "A Therapeutic Approach to Traumatic Nightmares"
11:45 AM - 12:15 PM	Sperry Andrews, Mind Science Foundation "Promoting Health and Well-Being Through A Sense of Connectedness"
12:15 PM - 2:00 PM	LUNCH
2:00 PM - 2:30 PM	Richard Proescher, Virginia Beach, VA "Psychic Development and Life Trauma"
2:30 PM - 3:00 PM	James McClenon, Elizabeth City State College "African-American and Japanese Anomalous Experiences"
3:00 PM - 3:30 PM	R. A. Steffenhagen, Durham, NC "Hypnosis and Out-of-body Experience"
3:30 PM - 3:50 PM	BREAK
3:50 PM - 5:00 PM	Panel Discussion: "Alternative Paradigms for Healing The Mind" McMillin, Griffin, Eisenhower, Michaels, Steffenhagen
7:00 PM - 9:00 PM	BANQUET Ramada Dolphin Room Cost $15.00 No speaker, just good food and conversation

(Sunday schedule on reverse side)

Approved For Release 2000/08/08 : CIA-RDP96-00789R002900280001-0

Approved For Release 2000/08/08 : CIA-RDP96-00789R002900280001-0

Sunday, February 17, 1991

9:00 AM - 9:30 AM	Glen Moon, Fredericksburg, VA "On Becoming A Parapsychologist"
9:30 AM - 10:00 AM	Christiana Handford, Stairs of Gold Research Association "Extrasensory Perception Using Lucid Dreaming"
10:00 AM - 10:30 AM	Leon Curry, Metter, GA "Medical Diagnosis by Handprint Analysis: Research Methods and Findings"
10:30 AM - 11:00 AM	BREAK
11:00 AM - 11:30 AM	Greta Alexander, Delevan, IL "Medical Diagnosis by Handprint Analysis: The Process"
11:30 AM - 12:00 Noon	Linda Schiller, Virginia Beach, VA "Seven Steps To Insight"
12:00 Noon - 2:00 PM	LUNCH
2:00 PM - 2:30 PM	Adella Wilson, Virginia Beach, VA "The Healing Mechanism: The Role of Body Energy"
2:30 PM - 3:00 PM	Bruce Baar, Downingtown, PA "New Methods of Electromagnetic Healing"
3:00 PM - 3:30 PM	BREAK
3:30 PM - 4:00 PM	Joseph Myers, Charlotte, NC "Reincarnation and Natural Law"
4:00 PM - 5:00 PM	Demonstrations and General Discussion Baar, Steffenhagen, etc.

(Saturday schedule on reverse side)

APPENDIX A (cont.)

Approved For Release 2000/08/08 : CIA-RDP96-00789R002900280001-0

Approved For Release 2000/08/08 : CIA-RDP96-00789R002900280001-0

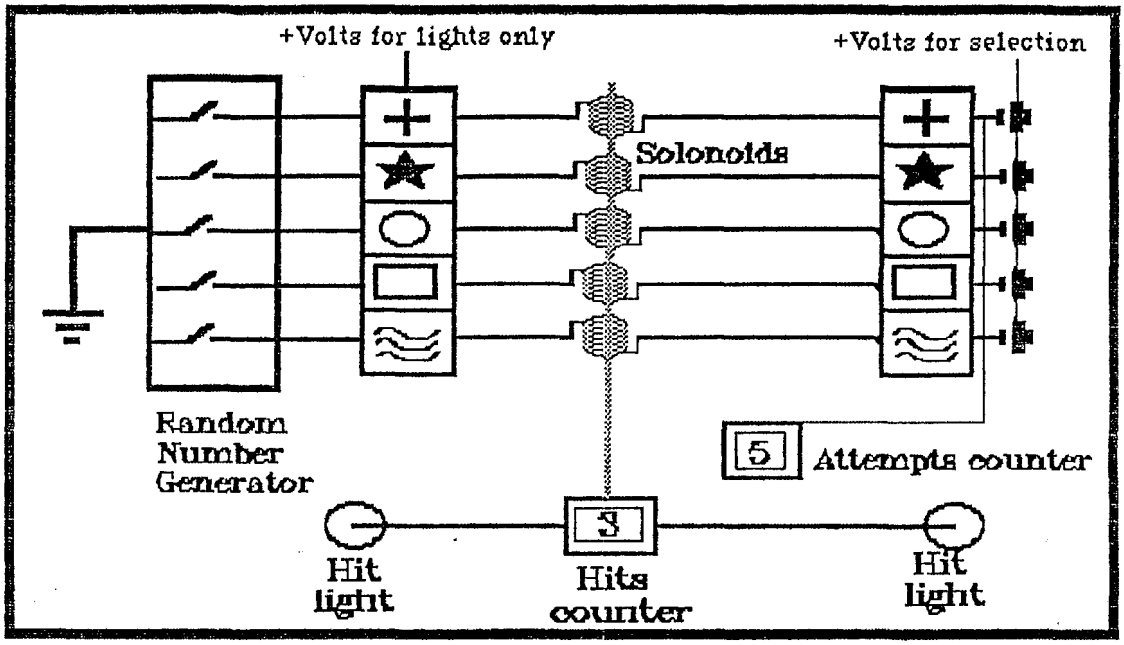

ESP MACHINE AT EDGAR CAYCE INSTITUTE
BASIC OPERATING DIAGRAM

1. The random number generator randomly closes one of the five switches.
2. The light behind the symbol selected turns on, showing the symbol to the "Sender".
3. The "Sender" concentrates on the symbol.
4. The "Receiver" waits until an impression is gained, and presses the button below the symbol he/she thinks is the proper target.
5. Pressing the button automatically kicks up the attempts counter.
6. If the correct button is pressed, the solonoid circuit is activated, activating both hit lights and the hits counter.

APPENDIX B

Approved For Release 2000/08/08 : CIA-RDP96-00789R002900280001-0

Approved For Release 2000/08/08 : CIA-RDP96-00789R002900280001-0

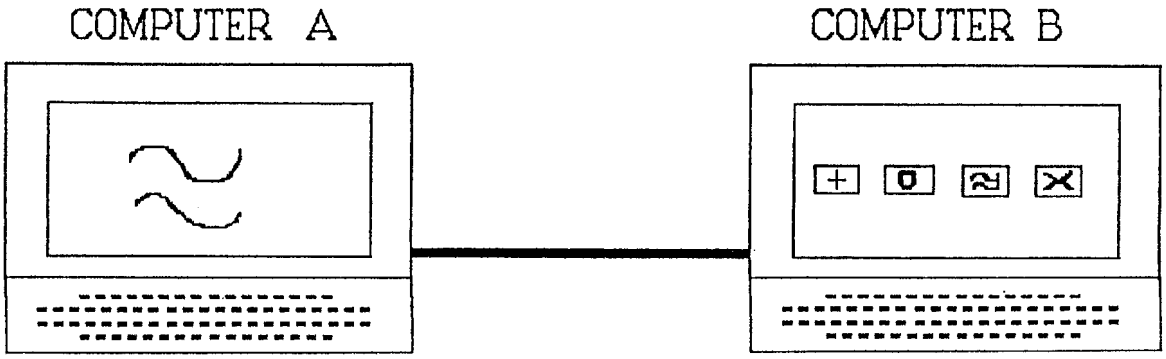

ESP MACHINE FOR DT-S
BASIC FUNCTIONAL CONSTRUCT

1. Computer A randomly selects a pattern from its library of many. This pattern number is sent, via null modem cable, to computer B.

2. Computer B receives the pattern number, looks it up in its library of symbols, and randomly assigns it a position on the screen.

3. Computer B selects 3 other symbols and places them on the screen with the target symbol.

4. The "Sender" at computer A concentrates on the target pattern.

5. When the "receiver" selects one of the symbols shown, computer B:
   a. Sends Computer A the pattern number.
   b. Kicks up the on-screen attempt counter.
   c. Compares the selected symbol and the target symbol. If they are the same, Computer B kicks up the on-screen hit counter.

6. Computer A:
   a. Receives the selected symbol's number.
   b. Kicks up the on-screen attempt counter.
   c. Compares the selected symbol and the target symbol. If they are the same, Computer A kicks up its hit counter.

7. The process begins again at Step 1.

Approved For Release 2000/08/08 : CIA-RDP96-00789R002900280001-0